MHV Female Bulkhead Mount Connector
Solder Attachment Turret Terminal, .537 inch D
Hole

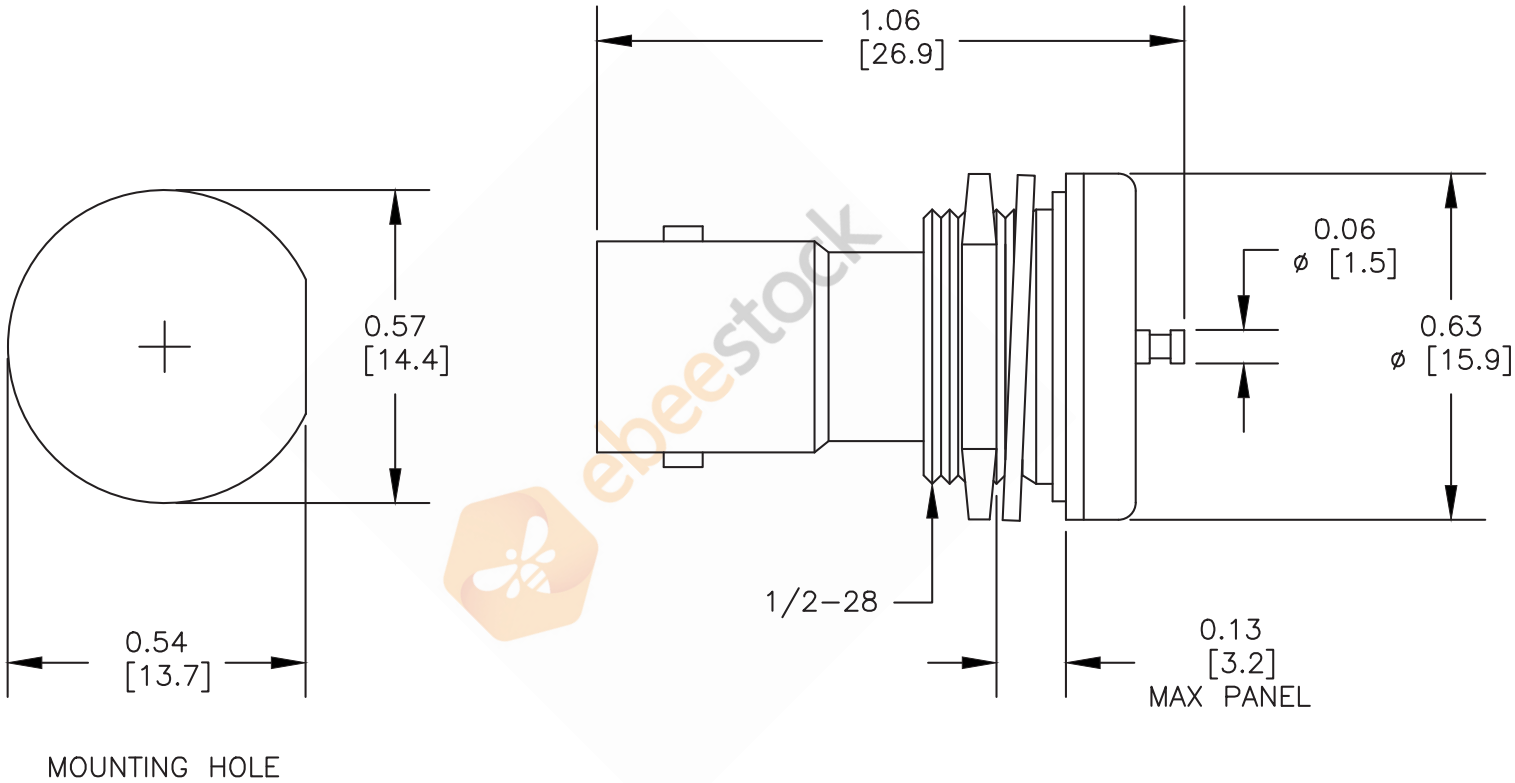

8TH FLOOR, BUILDING 1, YONGFU SCIENCE AND TECHNOLOGY
CENTER INDUSTRIAL PARK, NANZHA DISTRICT 5,
HUMEN,523900,DONGGUAN, GUANGDONG, CHINA
WEBSITE: www.ebeestock.com
EMAIL: sales@ebeestock.com

DWG TITLE

ET10715

NOTES:
1. UNLESS OTHERWISE SPECIFIED ALL DIMENSIONS ARE NOMINAL.
2. ALL SPECIFICATIONS ARE SUBJECT TO CHANGE WITHOUT NOTICE AT ANY TIME.
3. DIMENSIONS ARE IN INCHES [mm].
4. FITS MIL-C-17 AND EQUIVALENT CABLES.

REV. -	FSCM NO. 53919	CAD FILE 050702	SCALE N/A	SIZE A	2233