N Female Low PIM Connector Solder Attachment for SPO-375, SP F-375

RF Connectors Technical Data Sheet

TIMES MICROWAVE SYSTEMS

ET11039

Times Microwave Systems Connector Specification

Configuration

- N Female Connector
- 50 Ohms
- Straight Body Geometry
- SPO-375, SPF-375 Interface Type
- Solder/Solder Attachment
- Low PIM Design

Features

- Max. Operating Frequency 6 GHz
- Excellent VSWR of 1.25:1
- PIM levels lower than -160 dBc
- Silver Plated Brass Contact
- 196 µin contact plating

Applications

- General Purpose Test
- Wireless Communications
- Custom Cable Assemblies
- Low PIM Applications
- Distributed Antenna Systems (DAS)

Description

Times Microwave's ET11039 type N female connector offered by Ebeestock with solder/solder attachment for Times' SPO-375 and SPF-375 is part of our full line of RF components available for same-day shipping. Times Microwave's type N female connector operates up to a maximum frequency of 6 GHz and offers excellent VSWR of 1.25:1. The Times type N female connector also has low passive intermodulation of -160 dBc.

Times Microwave's type N female connector ET11039 datasheet specifications and drawing with dimensions are shown below in this PDF. Ebeestock's broad catalog of RF, microwave and millimeter wave connectors allows designers to configure and customize their signal connections however they like. Whether the need is to provide an I/O for a board design, or simply create a custom cable assembly configuration, Ebeestock has the right connector for the job. Ebeestock can also expertly build your custom cable assemblies for you and ship same-day.

Electrical Specifications

Description	Minimum	Typical	Maximum	Units
Frequency Range	DC		6	GHz
VSWR			1.25:1	
Insertion Loss			0.1	dB
Passive Intermodulation			-160	dBc
Operating Voltage (DC)			2,000	Vdc
Insulation Resistance	5,000			MOhms

Click the following link (or enter part number in "SEARCH" on website) to obtain additional part information including price, inventory and certifications: N Female Low PIM Connector Solder Attachment for SPO-375, SPF-375 ET11039

8th Floor, Building 1, Yongfu Science and Technology Center Industrial Park,
Nanzha District 5, Humen,523900, Dongguan, Guangdong, China.

Webstie:www.ebeestock.com Email:sales@ebeestock.com

© 2022 Ebeestock Enterprises All Rights Reserved

N Female Low PIM Connector Solder Attachment for SPO-375, SP F-375

RF Connectors
Technical Data Sheet

TIMES MICROWAVE SYSTEMS **ET11039**

Mechanical Specifications

Size

Length	1.26 in [32 mm]
Width/Dia.	0.95 in [24.13 mm]
Mating Torque	6 to 10 in-lbs [0.68 to 1.13 Nm]

Material Specifications

Description	Material	Plating
Contact	Brass	Silver 196 µin
Insulation	PTFE	
Outer Conductor	Brass	Tri-Metal 118 µin
Coupling Nut	Brass	Tri-Metal 118 µin
Gasket	Silicone Rubber	

Environmental Specifications

Temperature

Operating Range	-55 to +155 deg C
Shock	US MIL-STD 202
Vibration	US MIL-STD 202
Thermal Shock	US MIL-STD 202

Compliance Certifications (see product page for current document)

Plotted and Other Data

Notes:

Click the following link (or enter part number in “SEARCH” on website) to obtain additional part information including price, inventory and certifications: N Female Low PIM Connector Solder Attachment for SPO-375, SPF-375 ET11039

8th Floor, Building 1, Yongfu Science and Technology Center Industrial Park,
Nanzha District 5, Humen,523900, Dongguan, Guangdong, China.

Webstie:www.ebeestock.com Email:sales@ebeestock.com

© 2022 Ebeestock Enterprises All Rights Reserved

N Female Low PIM Connector Solder Attachment for SPO-375, SP F-375

RF Connectors Technical Data Sheet

TIMES MICROWAVE SYSTEMS

ET11039

N Female Low PIM Connector Solder Attachment for SPO-375, SPF-375 from Ebeestock Enterprises has same day shipment for domestic and International orders. Our RF, microwave and millimeter wave products maintain a 99.4% availability and are part of the broadest selection in the industry.

Click the following link (or enter part number in “SEARCH” on website) to obtain additional part information including price, inventory and certifications: N Female Low PIM Connector Solder Attachment for SPO-375, SPF-375 ET11039

URL: https://www.ebeestock.com/n-female-low-pim-connector-solder-attachment-for-spo-375-spf-375-0011039

The information contained in this document is accurate to the best of our knowledge and representative of the part described herein. It may be necessary to make modifications to the part and/or the documentation of the part, in order to implement improvements. Ebeestock reserves the right to make such changes as required. Unless otherwise stated, all specifications are nominal. Ebeestock does not make any representation or warranty regarding the suitability of the part described herein for any particular purpose, and Ebeestock does not assume any liability arising out of the use of any part or documentation.

8th Floor, Building 1, Yongfu Science and Technology Center Industrial Park,
Nanzha District 5, Humen,523900, Dongguan, Guangdong, China.

Webstie:www.ebeestock.com Email:sales@ebeestock.com

© 2022 Ebeestock Enterprises All Rights Reserved

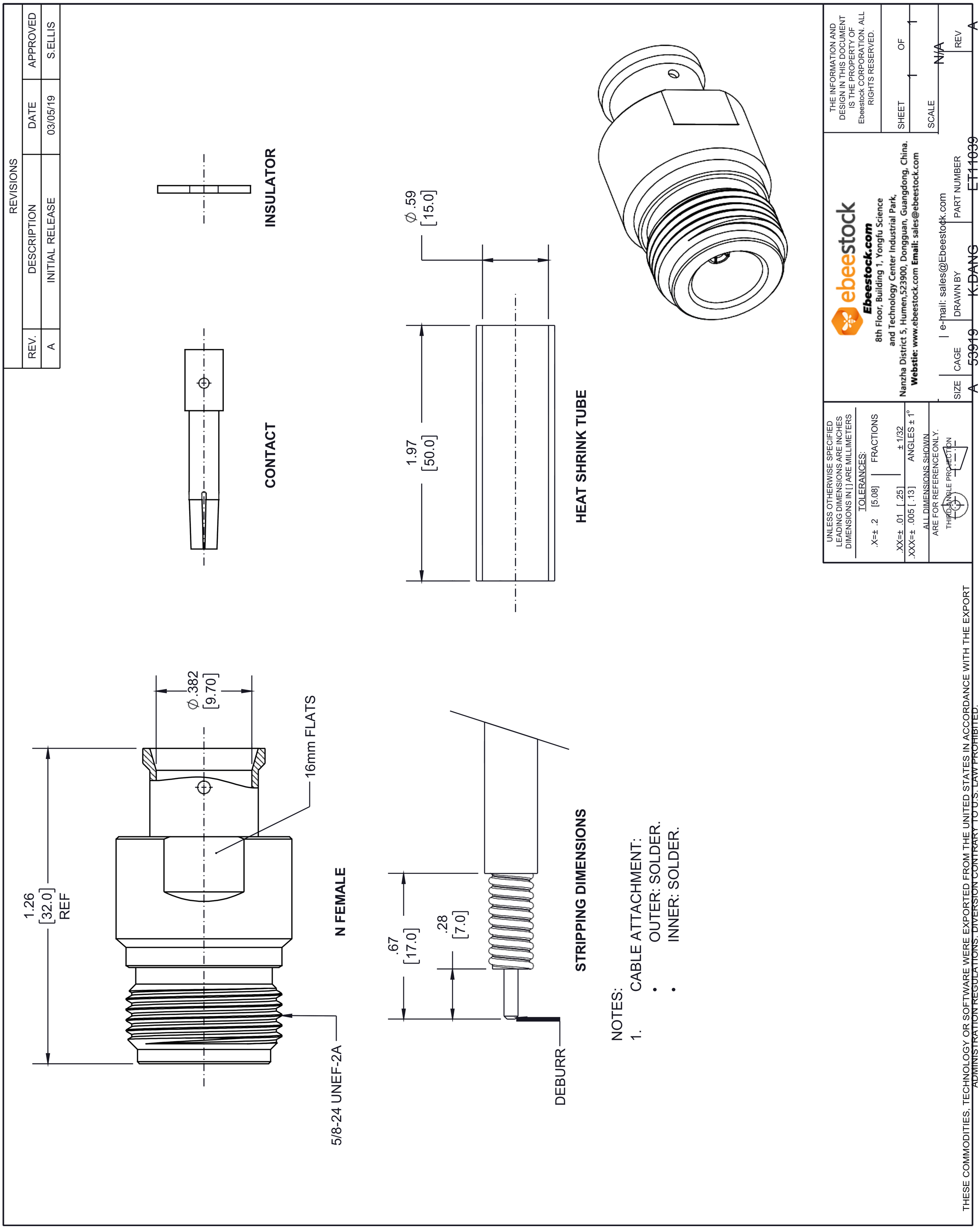
REVISIONS
REV. | DESCRIPTION | DATE | APPROVED
A | INITIAL RELEASE | 03/05/19 | S.ELLIS
INSULATOR
CONTACT
HEAT SHRINK TUBE
Ø .59 [15.0]
1.97 [50.0]
Ø .382 [9.70]
16mm FLATS
1.26 [32.0] REF
N FEMALE
5/8-24 UNEF-2A
.67 [17.0]
.28 [7.0]
DEBURR
STRIPPING DIMENSIONS
NOTES:
1. CABLE ATTACHMENT:
• OUTER: SOLDER.
• INNER: SOLDER.
THE INFORMATION AND DESIGN IN THIS DOCUMENT IS THE PROPERTY OF Ebeestock CORPORATION. ALL RIGHTS RESERVED.
SHEET 1 OF 1
SCALE N/A
REV A
ebeestock
Ebeestock.com
8th Floor, Building 1, Yongfu Science and Technology Center Industrial Park, Nanzha District 5, Humen,523900, Dongguan, Guangdong, China.
Webstie: www.ebeestock.com Email: sales@ebeestock.com
e-mail: sales@Ebeestock.com
SIZE A | CAGE 53919 | DRAWN BY K.DANG | PART NUMBER ET11039
UNLESS OTHERWISE SPECIFIED LEADING DIMENSIONS ARE INCHES DIMENSIONS IN [ ] ARE MILLIMETERS
TOLERANCES:
.X=± .2 [5.08] FRACTIONS ± 1/32
.XX=± .01 [.25] ANGLES ± 1°
.XXX=± .005 [.13] ALL DIMENSIONS SHOWN ARE FOR REFERENCE ONLY.
THIRD ANGLE PROJECTION
THESE COMMODITIES, TECHNOLOGY OR SOFTWARE WERE EXPORTED FROM THE UNITED STATES IN ACCORDANCE WITH THE EXPORT ADMINISTRATION REGULATIONS. DIVERSION CONTRARY TO U.S. LAW PROHIBITED.
T-Rev.B