QMA Male Connector Solder Attachment for ET38365, Low PIM

RF Connectors Technical Data Sheet

ET11062

Configuration

- QMA Male Connector
- 50 Ohms
- Straight Body Geometry
- ET38365 Interface Type
- Solder/Solder Attachment

Features

- Max. Operating Frequency 6 GHz
- Good VSWR of 1.3:1
- PIM levels lower than -150 dBc
- Silver Plated Brass Contact

Applications

- General Purpose Test
- Custom Cable Assemblies
- Low PIM Interconnects
- Distributed Antenna Systems (DAS)
- Low PIM Jumpers
- Low PIM Testing
- Low PIM Connections

Description

Ebeestock's ET11062 QMA male connector with solder/solder attachment for ET38365 is part of our full line of RF components available for same-day shipping. Our QMA male connector operates up to a maximum frequency of 6 GHz and offers good VSWR of 1.3:1. The QMA male connector also has low passive intermodulation of -150 dBc.

Our QMA male connector ET11062 datasheet specifications and drawing with dimensions are shown below in this PDF. Ebeestock's broad catalog of RF, microwave and millimeter wave connectors allows designers to configure and customize their signal connections however they like. Whether the need is to provide an I/O for a board design, or simply create a custom cable assembly configuration, Ebeestock has the right connector for the job. Ebeestock can also expertly build your custom cable assemblies for you and ship same-day.

Electrical Specifications

Description	Minimum	Typical	Maximum	Units
Frequency Range	DC		6	GHz
VSWR			1.3:1	
Insertion Loss			0.1	dB
Passive Intermodulation			-150	dBc
Operating Voltage (AC)			250	Vrms
Insulation Resistance	5,000			MOhms

Electrical Specification Notes:
Insertion Loss is 0.04*sqrt(FGHz)

Click the following link (or enter part number in "SEARCH" on website) to obtain additional part information including price, inventory and certifications: QMA Male Connector Solder Attachment for SPP 250-LLPL, Low PIM ET11062

8th Floor, Building 1, Yongfu Science and Technology Center Industrial Park,
Nanzha District 5, Humen,523900, Dongguan, Guangdong, China.

Webstie:www.ebeestock.com Email:sales@ebeestock.com

© 2022 Ebeestock Enterprises All Rights Reserved

QMA Male Connector Solder Attachment for ET38365, Low PIM

RF Connectors Technical Data Sheet ET11062

Material Specifications

Description	Material	Plating
Contact	Brass	Silver
Insulation	PTFE	
Outer Conductor	Phosphor Bronze	Tri-Metal
Body	Brass	Tri-Metal
Coupling Nut	Brass	Tri-Metal
Gasket	Silicone Rubber	

Environmental Specifications

Temperature

Operating Range -55 to +165 deg C

Compliance Certifications (see product page for current document)

Plotted and Other Data

Notes:

Click the following link (or enter part number in “SEARCH” on website) to obtain additional part information including price, inventory and certifications: QMA Male Connector Solder Attachment for ET38365, Low PIM ET11062

8th Floor, Building 1, Yongfu Science and Technology Center Industrial Park,
Nanzha District 5, Humen,523900, Dongguan, Guangdong, China.

Webstie:www.ebeestock.com Email:sales@ebeestock.com

© 2022 Ebeestock Enterprises All Rights Reserved

QMA Male Connector Solder Attachment for ET38365, Low PIM

RF Connectors Technical Data Sheet

ET11062

Assembly Instruction

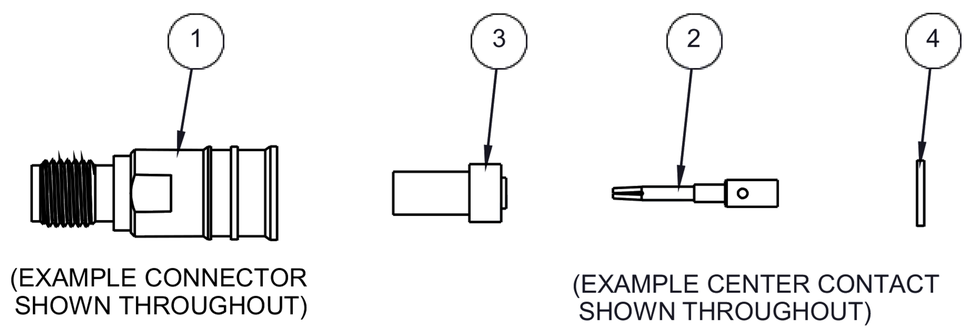

1. STRIP CABLE AS SHOWN, CHAMFER CENTER CONDUCTOR AND DEBURR CABLE.

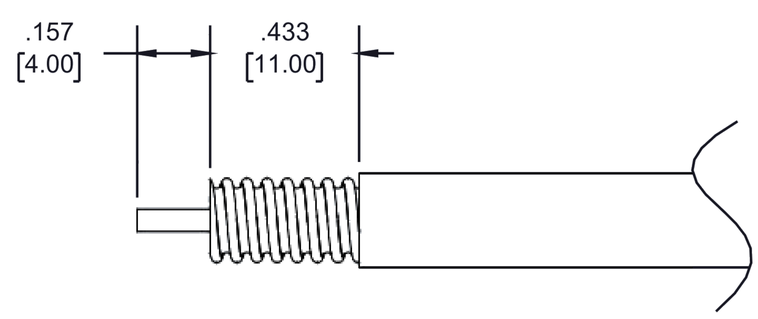

2. SLIDE THICKER INSULATOR 3 OVER CENTER CONTACT AND SLIDE THINNER INSULATOR 4 OVER CABLE CENTER CONDUCTOR. INSERT CENTER CONTACT AND SOLDER. WRAP THE CABLE BY SOLDER WIRE.

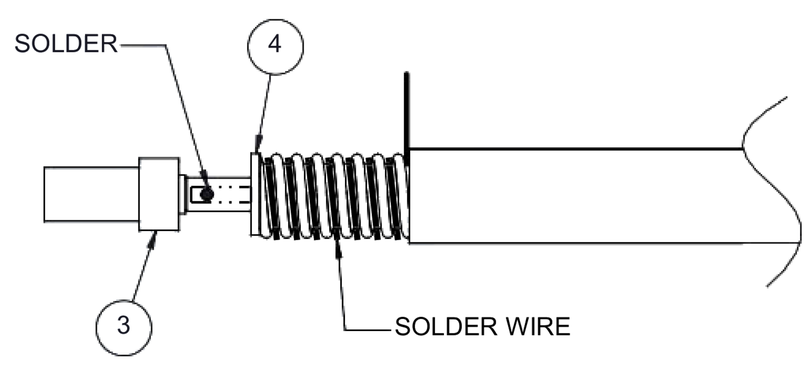

3. PUSH THE CONNECTOR BODY INTO THE CABLE, UNTIL IT STOPS. SOLDER THE CONNECTOR BODY WITH CABLE AND COVER HEATSHRINK SLEEVE.

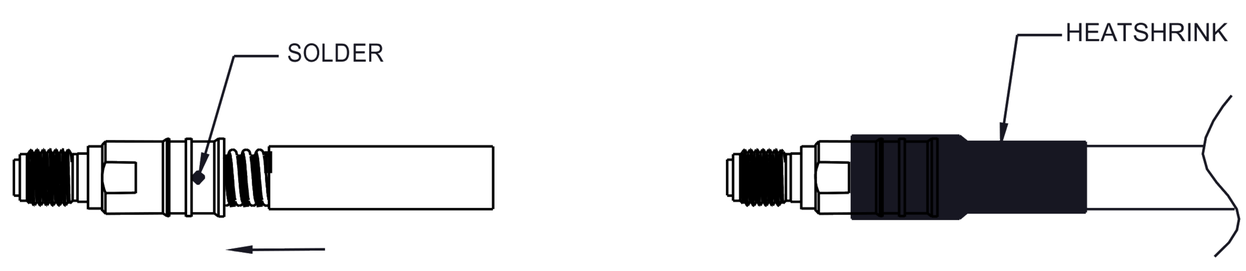

Click the following link (or enter part number in “SEARCH” on website) to obtain additional part information including price, inventory and certifications: QMA Male Connector Solder Attachment for ET38365, Low PIM ET11062

8th Floor, Building 1, Yongfu Science and Technology Center Industrial Park,
Nanzha District 5, Humen,523900, Dongguan, Guangdong, China.

Webstie:www.ebeestock.com Email:sales@ebeestock.com

© 2022 Ebeestock Enterprises All Rights Reserved

QMA Male Connector Solder Attachment for ET38365, Low PIM

RF Connectors Technical Data Sheet ET11062

QMA Male Connector Solder Attachment for ET38365, Low PIM from Ebeestock Enterprises has same day shipment for domestic and International orders. Our RF, microwave and millimeter wave products maintain a 99.4% availability and are part of the broadest selection in the industry.

Click the following link (or enter part number in “SEARCH” on website) to obtain additional part information including price, inventory and certifications: QMA Male Connector Solder Attachment for ET38365, Low PIM ET11062

URL: https://www.ebeestock.com/qma-male-connector-solder-attachment-for-spp-250-llpl-low-pim-00 11062

The information contained in this document is accurate to the best of our knowledge and representative of the part described herein. It may be necessary to make modifications to the part and/or the documentation of the part, in order to implement improvements. Ebeestock reserves the right to make such changes as required. Unless otherwise stated, all specifications are nominal. Ebeestock does not make any representation or warranty regarding the suitability of the part described herein for any particular purpose, and Ebeestock does not assume any liability arising out of the use of any part or documentation.

8th Floor, Building 1, Yongfu Science and Technology Center Industrial Park,
Nanzha District 5, Humen,523900, Dongguan, Guangdong, China.

Webstie:www.ebeestock.com Email:sales@ebeestock.com

© 2022 Ebeestock Enterprises All Rights Reserved

© 2022 Ebeestock Enterprises All Rights Reserved

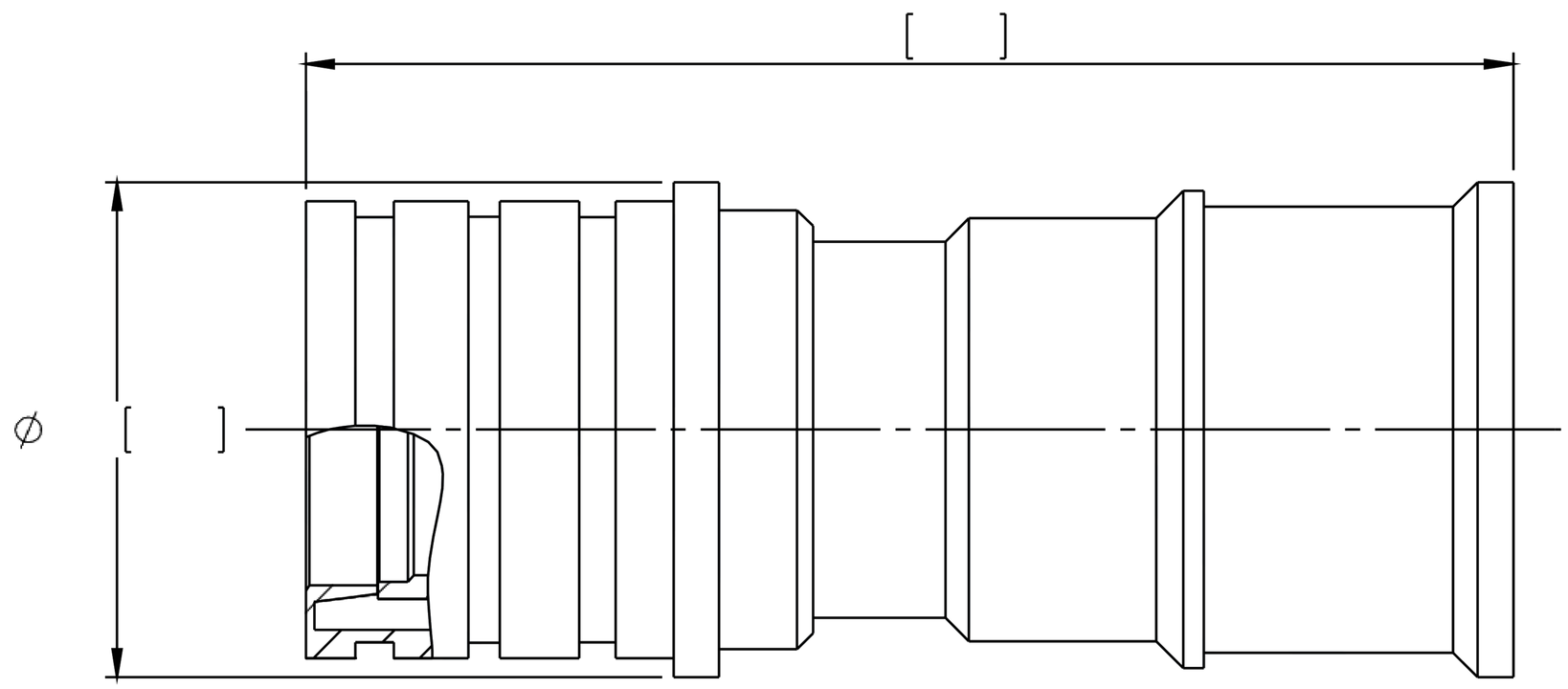

*STANDARD TOLERANCES APPLY
ONLY TO DIMENSIONS IN INCHES

ebeestock
Ebeestock.com
8th Floor, Building 1, Yongfu Science
and Technology Center Industrial Park,
Nanzha District 5, Humen,523900, Dongguan, Guangdong, China.
Webstie: www.ebeestock.com **Email:** sales@ebeestock.com

DWG TITLE	NOTES: 1. UNLESS OTHERWISE SPECIFIED ALL DIMENSIONS ARE NOMINAL. 2. ALL SPECIFICATIONS ARE SUBJECT TO CHANGE WITHOUT NOTICE AT ANY TIME 3. DIMENSIONS ARE IN INCHES [mm].			
CAGE CODE 53919	CAD FILE	SCALE N/A	SIZE A	