QMA Male Right Angle Low PIM Connector Solder Attachment for ET38402, ET38402-LF

RF Connectors Technical Data Sheet

TIMES MICROWAVE SYSTEMS

ET11069

Times Microwave Systems Connector Specification

Configuration

- QMA Male Connector
- 50 Ohms
- Right Angle Body Geometry
- Connector Interface Types: ET38402, ET38400
- Low PIM Design

Features

- Max. Operating Frequency 3 GHz
- Excellent VSWR of 1.2:1
- PIM levels lower than -150 dBc
- Silver Plated Beryllium Copper Contact
- 200 µin contact plating

Applications

- General Purpose Test
- Wireless Communications
- Custom Cable Assemblies
- Low PIM Applications
- Distributed Antenna Systems (DAS)

Description

Ebeestock's ET11069 QMA male right angle connector with solder/solder attachment for ET38402 and ET38400 is part of our full line of RF components available for same-day shipping. Our QMA male connector operates up to a maximum frequency of 3 GHz and offers excellent VSWR of 1.2:1. The QMA male connector also has low passive intermodulation of -150 dBc. Its right angle body geometry allows for easier connections in tight spaces.

Our QMA male right angle connector ET11069 datasheet specifications and drawing with dimensions are shown below in this PDF. Ebeestock's broad catalog of RF, microwave and millimeter wave connectors allows designers to configure and customize their signal connections however they like. Whether the need is to provide an I/O for a board design, or simply create a custom cable assembly configuration, Ebeestock has the right connector for the job. Ebeestock can also expertly build your custom cable assemblies for you and ship same-day.

Electrical Specifications

Description	Minimum	Typical	Maximum	Units
Frequency Range	DC		3	GHz
VSWR			1.2:1	
Insertion Loss			0.173	dB
Passive Intermodulation			-150	dBc
Operating Voltage (DC)			1,000	Vdc
Insulation Resistance	5,000			MOhms

Electrical Specification Notes:
Insertion Loss is 0.1*sqrt(FGHz)

Click the following link (or enter part number in "SEARCH" on website) to obtain additional part information including price, inventory and certifications: QMA Male Right Angle Low PIM Connector Solder Attachment for ET38402, ET38400 TC-402-QM-RA-LP

8th Floor, Building 1, Yongfu Science and Technology Center Industrial Park,
Nanzha District 5, Humen,523900, Dongguan, Guangdong, China.

Webstie:www.ebeestock.com Email:sales@ebeestock.com

© 2022 Ebeestock Enterprises All Rights Reserved

QMA Male Right Angle Low PIM Connector Solder Attachment for ET38402, ET38402-LF

RF Connectors
Technical Data Sheet

TIMES MICROWAVE SYSTEMS

ET11069

Mechanical Specifications

Size

Length	0.75 in [19.05 mm]
Width/Dia.	0.413 in [10.49 mm]
Mating Cycles	100 Cycles
Cable Retention Force	33 lbs [14.97 kg]

Material Specifications

Description	Material	Plating
Contact	Beryllium Copper	Silver 200 µin
Insulation	PTFE	
Body	Brass	Tri-Metal 80 µin
Coupling Nut	Brass	Tri-Metal 80 µin

Environmental Specifications

Temperature

Operating Range	-40 to +85 deg C
Shock	MIL-STD 202G, Meth. 213, Cond. I
Vibration	MIL-STD 202G, Meth. 204, Cond. D
Thermal Shock	MIL-STD 202G, Meth. 107, Cond. B

Environmental Specification Notes:
Climatic Class: IEC 60068 40/85/21

Compliance Certifications (see product page for current document)

Plotted and Other Data

Notes:

Click the following link (or enter part number in “SEARCH” on website) to obtain additional part information including price, inventory and certifications: QMA Male Right Angle Low PIM Connector Solder Attachment for ET38402, ET38400 TC-402-QM-RA-LP

8th Floor, Building 1, Yongfu Science and Technology Center Industrial Park,
Nanzha District 5, Humen,523900, Dongguan, Guangdong, China.

Webstie:www.ebeestock.com Email:sales@ebeestock.com

© 2022 Ebeestock Enterprises All Rights Reserved

QMA Male Right Angle Low PIM Connector Solder Attachment for ET38402, ET38402-LF

RF Connectors
Technical Data Sheet

TIMES MICROWAVE SYSTEMS

ET11069

QMA Male Right Angle Low PIM Connector Solder Attachment for ET38402, ET38400 from Ebeestock Enterprises has same day shipment for domestic and International orders. Our RF, microwave and millimeter wave products maintain a 99.4% availability and are part of the broadest selection in the industry.

Click the following link (or enter part number in “SEARCH” on website) to obtain additional part information including price, inventory and certifications: QMA Male Right Angle Low PIM Connector Solder Attachment for ET38402, ET38400 TC-402-QM-RA-LP

URL: https://www.ebeestock.com/qma-male-right-angle-low-pim-connector-solder-attachment-for-tft-402-tft-402-lf-0011069

The information contained in this document is accurate to the best of our knowledge and representative of the part described herein. It may be necessary to make modifications to the part and/or the documentation of the part, in order to implement improvements. Ebeestock reserves the right to make such changes as required. Unless otherwise stated, all specifications are nominal. Ebeestock does not make any representation or warranty regarding the suitability of the part described herein for any particular purpose, and Ebeestock does not assume any liability arising out of the use of any part or documentation.

8th Floor, Building 1, Yongfu Science and Technology Center Industrial Park,
Nanzha District 5, Humen,523900, Dongguan, Guangdong, China.

Webstie:www.ebeestock.com Email:sales@ebeestock.com

© 2022 Ebeestock Enterprises All Rights Reserved

© 2022 Ebeestock Enterprises All Rights Reserved

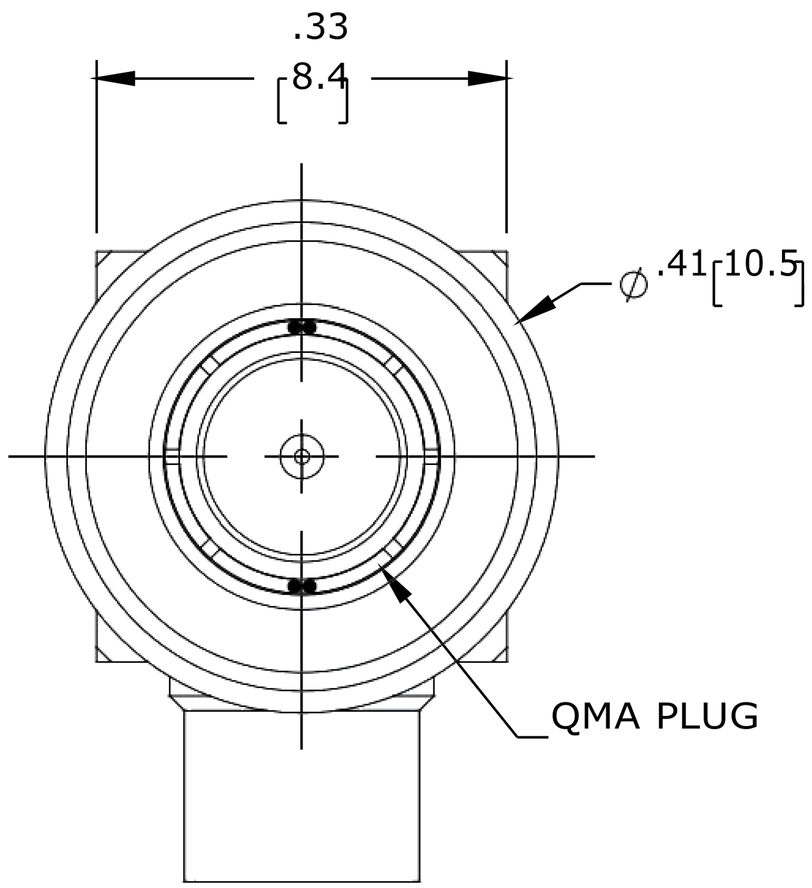

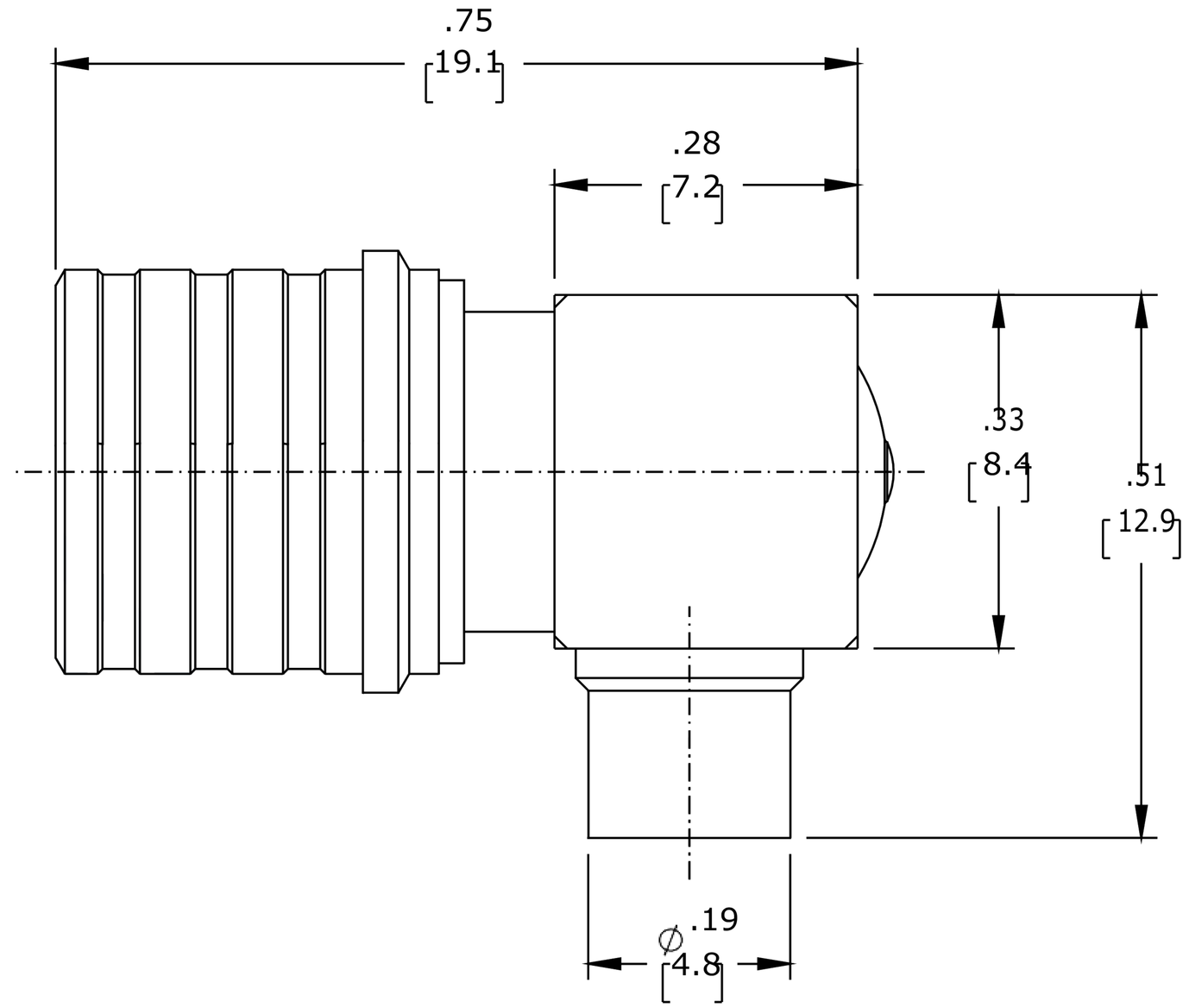

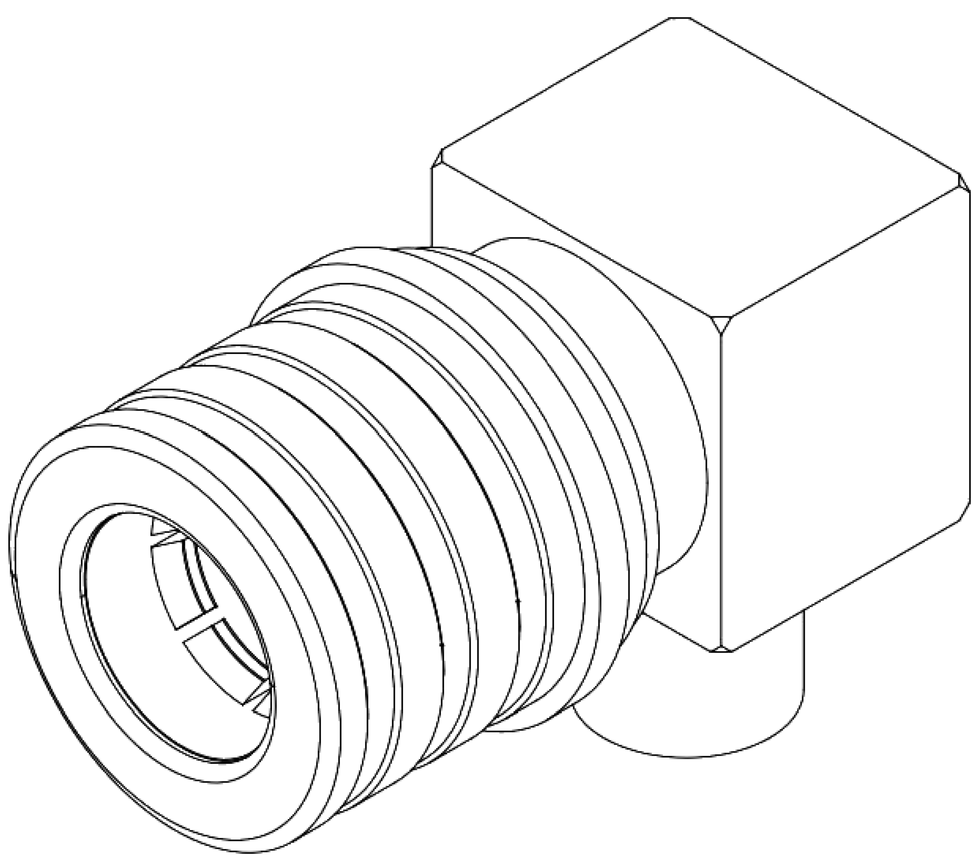

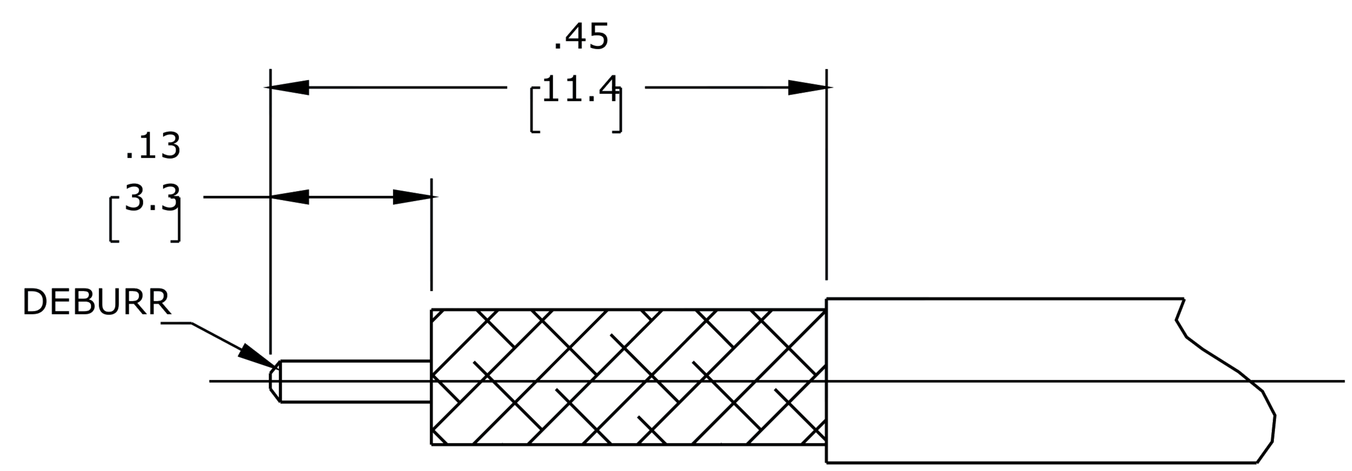

RECOMMENDED CABLE STRIPPING DIM'S
Connector adds: 0 mm

THESE COMMODITIES, TECHNOLOGY OR SOFTWARE WERE EXPORTED FROM THE UNITED STATES IN ACCORDANCE WITH THE EXPORT ADMINISTRATION REGULATIONS. DIVERSION CONTRARY TO U.S. LAW PROHIBITED.

UNLESS OTHERWISE SPECIFIED
LEADING DIMENSIONS ARE INCHES
DIMENSIONS IN [ ] ARE MILLIMETERS

TOLERANCES:

.X = ±.2 [5.08]
.XX = ± .02 [.51]
.XXX = ±.005 [.13]

FRACTIONS ± 1/32
ANGLES ± 1°

CABLE LENGTH (L) TOLERANCES:

L ≤ 12 [305] = +1 [25] / -0
12 [305] < L ≤ 60 [1524] = +2 [51] / -0
60 [1524] < L ≤ 120 [3048] = +4 [102] / -0
120 [3048] < L ≤ 300 [7620] = +6 [152] / -0
300 [7620] < L = +5%L / -0

ALL DIMENSIONS SHOWN ARE FOR REFERENCE ONLY.

PASTERNACK
ebeestock
Ebeestock.com
8th Floor, Building 1, Yongfu Science and Technology Center Industrial Park, Nanzha District 5, Humen,523900, Dongguan, Guangdong, China.
Webstie: www.ebeestock.com **Email:** sales@ebeestock.com
sales@ebeestock.com

THIRD-ANGLE PROJECTION

THE INFORMATION AND DESIGN IN THIS DOCUMENT IS THE PROPERTY OF Ebeestock CORPORATION ALL RIGHTS RESERVED.

SHEET	OF
1	1

SCALE 4:1

SIZE	CAGE CODE	DRAWN BY	ITEM NO.	REV
A	53919	DMAY	ET11069	A