SMA Male Right Angle Connector Solder Attachment for ET-RG58 , ET-RG55, ET-ET-RG142, ET-RG223, ET-RG400

# RF Connectors
# Technical Data Sheet ET11125

## Configuration

- SMA Male Connector
- 50 Ohms
- Right Angle Body Geometry
- Connector Interface Types: ET-RG58, ET-RG55, ET-RG142, ET-RG223, ET-RG400

## Applications

- General Purpose Test
- Custom Cable Assemblies

### Description

Ebeestock's ET11125 SMA male right angle connector with solder/solder attachment for ET-RG58, ET-RG55, ET-RG142, ET-RG223 and ET-RG400 is part of our full line of RF components available for same-day shipping. Its right angle body geometry allows for easier connections in tight spaces.

Our SMA male right angle connector ET11125 datasheet specifications and drawing with dimensions are shown below in this PDF. Ebeestock's broad catalog of RF, microwave and millimeter wave connectors allows designers to configure and customize their signal connections however they like. Whether the need is to provide an I/O for a board design, or simply create a custom cable assembly configuration, Ebeestock has the right connector for the job. Ebeestock can also expertly build your custom cable assemblies for you and ship same-day.

### Mechanical Specifications

Weight 0.013 lbs [5.9 g]

#### Material Specifications

| Description | Material | Plating |
|---|---|---|
| Body | Brass | Nickel |

### Environmental Specifications

**Compliance Certifications** (see product page for current document)

### Plotted and Other Data

Notes:

Click the following link (or enter part number in "SEARCH" on website) to obtain additional part information including price, inventory and certifications: SMA Male Right Angle Connector Solder Attachment for ET-RG58, ET-RG55, ET-RG142, ET-RG223, ET-RG400 ET11125

8th Floor, Building 1, Yongfu Science and Technology Center Industrial Park,
Nanzha District 5, Humen,523900, Dongguan, Guangdong, China.

Webstie:www.ebeestock.com Email:sales@ebeestock.com

© 2022 Ebeestock Enterprises All Rights Reserved

SMA Male Right Angle Connector Solder Attachment for ET-RG58

, ET-RG55, ET-ET-RG142, ET-RG223, ET-RG400

# RF Connectors
# Technical Data Sheet ET11125

SMA Male Right Angle Connector Solder Attachment for ET-RG58, ET-RG55, ET-RG142, ET-RG223, ET-RG400 from Ebeestock Enterprises has same day shipment for domestic and International orders. Our RF, microwave and millimeter wave products maintain a 99.4% availability and are part of the broadest selection in the industry.

Click the following link (or enter part number in “SEARCH” on website) to obtain additional part information including price, inventory and certifications: SMA Male Right Angle Connector Solder Attachment for ET-RG58, ET-RG55, ET-RG142, ET-RG223, ET-RG400 ET11125

**URL:** https://www.ebeestock.com/sma-male-right-angle-connector-solder-attachment-for-rg58-rg55-rg142-rg223-rg400-0011125

The information contained in this document is accurate to the best of our knowledge and representative of the part described herein. It may be necessary to make modifications to the part and/or the documentation of the part, in order to implement improvements. Ebeestock reserves the right to make such changes as required. Unless otherwise stated, all specifications are nominal. Ebeestock does not make any representation or warranty regarding the suitability of the part described herein for any particular purpose, and Ebeestock does not assume any liability arising out of the use of any part or documentation.

8th Floor, Building 1, Yongfu Science and Technology Center Industrial Park,
Nanzha District 5, Humen,523900, Dongguan, Guangdong, China.

Webstie:www.ebeestock.com Email:sales@ebeestock.com

© 2022 Ebeestock Enterprises All Rights Reserved

© 2022 Ebeestock Enterprises All Rights Reserved

www.ebeestock.com

| REVISIONS | | | |
|---|---|---|---|
| REV. | DESCRIPTION | DATE | APPROVED |
| 1.1 | PCR ET11125 20190418 | 05/01/19 | SELLIS |

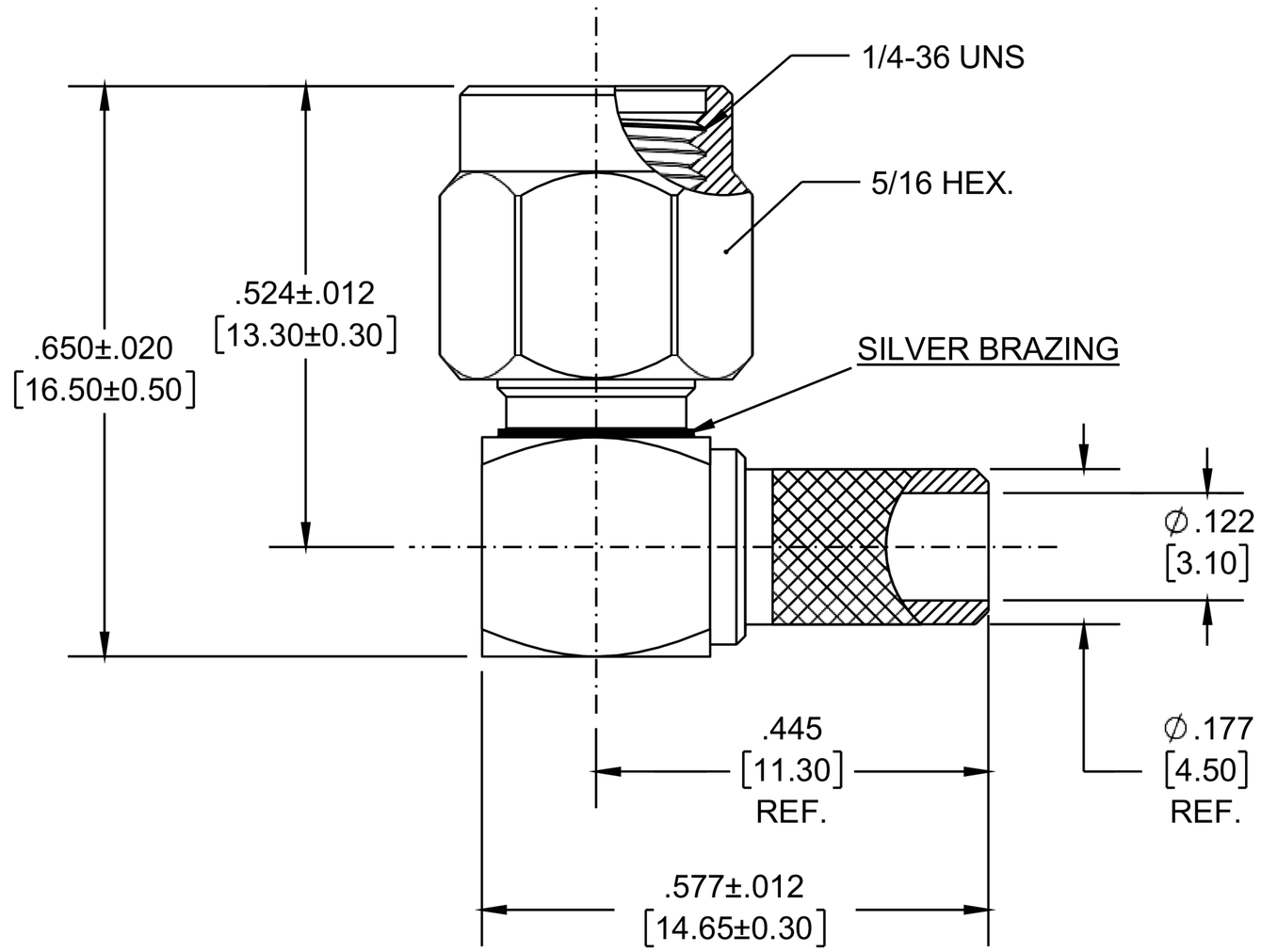


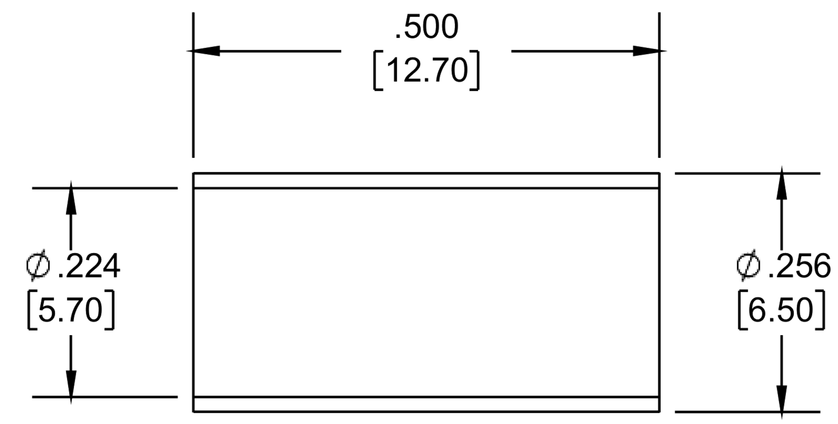


**FERRULE**

**CAP**

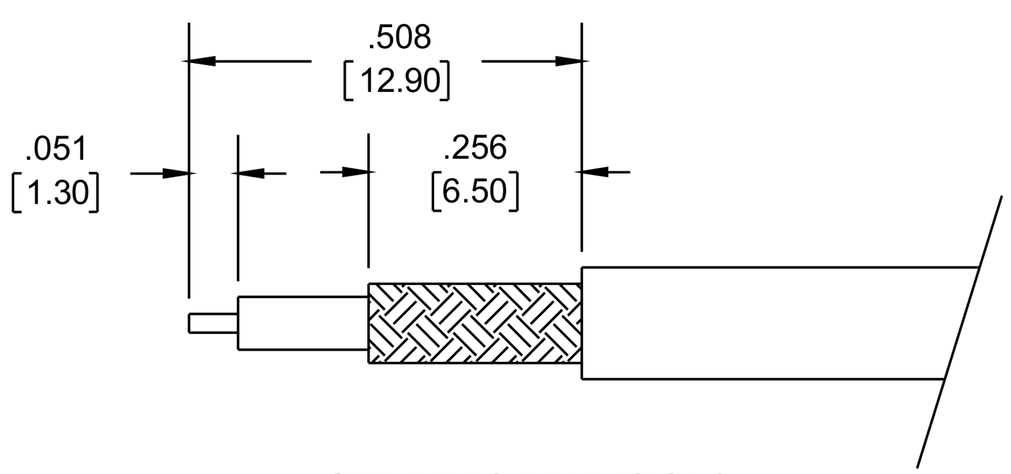


**STRIPPING DIMENSIONS**

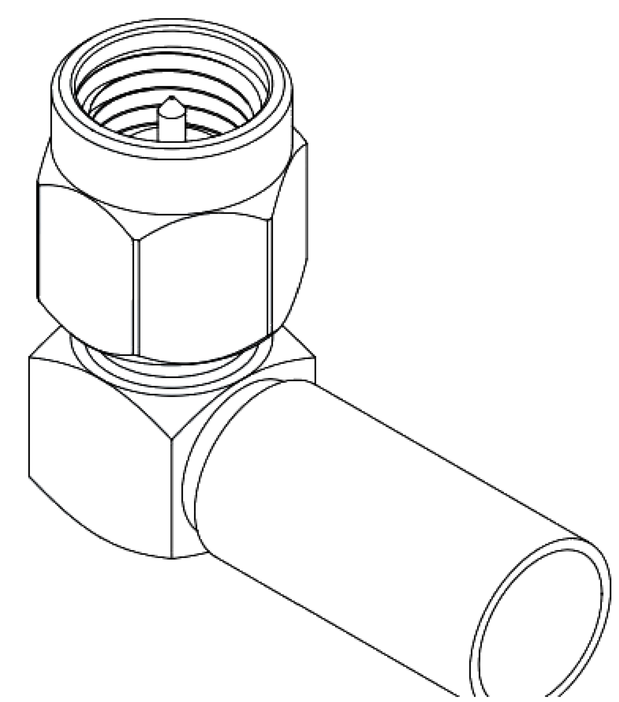

NOTES:

1. CABLE ATTACHMENT:
   - OUTER: SOLDER.
   - INNER: SOLDER.

UNLESS OTHERWISE SPECIFIED
LEADING DIMENSIONS ARE INCHES
DIMENSIONS IN [ ] ARE MILLIMETERS

TOLERANCES:

| | | |
|---|---|---|
| .X=± .2 | [5.08] | FRACTIONS |
| .XX=± .01 | [ .25] | ± 1/32 |
| .XXX=± .005 | [ .13] | ANGLES ± 1° |

ALL DIMENSIONS SHOWN ARE FOR REFERENCE ONLY.

THIRD ANGLE PROJECTION

ebeestock
Ebeestock.com
8th Floor, Building 1, Yongfu Science and Technology Center Industrial Park,
Nanzha District 5, Humen,523900, Dongguan, Guangdong, China.
**Webstie:** www.ebeestock.com **Email:** sales@ebeestock.com

THE INFORMATION AND DESIGN IN THIS DOCUMENT IS THE PROPERTY OF Ebeestock CORPORATION. ALL RIGHTS RESERVED.

SHEET 1 OF 1

SCALE N/A

| SIZE | CAGE | DRAWN BY | PART NUMBER | REV |
|---|---|---|---|---|
| A | 53919 | KDANG | ET11125 | 1.1 |

THESE COMMODITIES, TECHNOLOGY OR SOFTWARE WERE EXPORTED FROM THE UNITED STATES IN ACCORDANCE WITH THE EXPORT ADMINISTRATION REGULATIONS. DIVERSION CONTRARY TO U.S. LAW PROHIBITED.

T-Rev.A

© 2022 Ebeestock Enterprises All Rights Reserved