SMA Female Bulkhead Mount Connector Solder Attachment for ET -RG58, ET-RG55, ET-ET-RG142, ET-RG223, .235 inch D Hole

RF Connectors
Technical Data Sheet ET11165

Configuration

- SMA Female Connector
- 50 Ohms
- Straight Body Geometry
- Connector Interface Types: ET-RG58, ET-RG55, ET-RG142, ET-RG223
- Bulkhead

Applications

- General Purpose Test
- Rack and Panel Mount Applications
- Custom Cable Assemblies

Description

Ebeestock's ET11165 SMA female bulkhead connector with solder/solder attachment for ET-RG58, ET-RG55, ET-RG142 and ET-RG223 (.235 inch D hole) is part of our full line of RF components available for same-day shipping. This SMA bulkhead connector allows designers to create external connections on their product enclosures, and can be used in a variety of other rack mount and panel mount applications.

Our SMA female bulkhead connector ET11165 datasheet specifications and drawing with dimensions are shown below in this PDF. Ebeestock's broad catalog of RF, microwave and millimeter wave connectors allows designers to configure and customize their signal connections however they like. Whether the need is to provide an I/O for a board design, or simply create a custom cable assembly configuration, Ebeestock has the right connector for the job. Ebeestock can also expertly build your custom cable assemblies for you and ship same-day.

Mechanical Specifications

Weight 0.013 lbs [5.9 g]

Material Specifications

Description	Material	Plating
Body	Brass	Nickel

Environmental Specifications

Compliance Certifications (see product page for current document)

Plotted and Other Data

Notes:

Click the following link (or enter part number in "SEARCH" on website) to obtain additional part information including price, inventory and certifications: SMA Female Bulkhead Mount Connector Solder Attachment for ET-RG58, ET-RG55, ET-RG142, ET-RG223, .235 inch D Hole ET11165

8th Floor, Building 1, Yongfu Science and Technology Center Industrial Park,
Nanzha District 5, Humen,523900, Dongguan, Guangdong, China.

Webstie:www.ebeestock.com Email:sales@ebeestock.com

© 2022 Ebeestock Enterprises All Rights Reserved

SMA Female Bulkhead Mount Connector Solder Attachment for ET -RG58, ET-RG55, ET-ET-RG142, ET-RG223, .235 inch D Hole

RF Connectors
Technical Data Sheet ET11165

SMA Female Bulkhead Mount Connector Solder Attachment for ET-RG58, ET-RG55, ET-RG142, ET-RG223, .235 inch D Hole from Ebeestock Enterprises has same day shipment for domestic and International orders. Our RF, microwave and millimeter wave products maintain a 99.4% availability and are part of the broadest selection in the industry.

Click the following link (or enter part number in “SEARCH” on website) to obtain additional part information including price, inventory and certifications: SMA Female Bulkhead Mount Connector Solder Attachment for ET-RG58, ET-RG55, ET-RG142, ET-RG223,
.235 inch D Hole ET11165

URL: https://www.ebeestock.com/sma-female-bulkhead-mount-connector-solder-attachment-for-rg58-rg55-rg142-rg223-235-inch-d-hole-0011165

The information contained in this document is accurate to the best of our knowledge and representative of the part described herein. It may be necessary to make modifications to the part and/or the documentation of the part, in order to implement improvements. Ebeestock reserves the right to make such changes as required. Unless otherwise stated, all specifications are nominal. Ebeestock does not make any representation or warranty regarding the suitability of the part described herein for any particular purpose, and Ebeestock does not assume any liability arising out of the use of any part or documentation.

8th Floor, Building 1, Yongfu Science and Technology Center Industrial Park,
Nanzha District 5, Humen,523900, Dongguan, Guangdong, China.

Webstie:www.ebeestock.com Email:sales@ebeestock.com

© 2022 Ebeestock Enterprises All Rights Reserved

© 2022 Ebeestock Enterprises All Rights Reserved

www.ebeestock.com

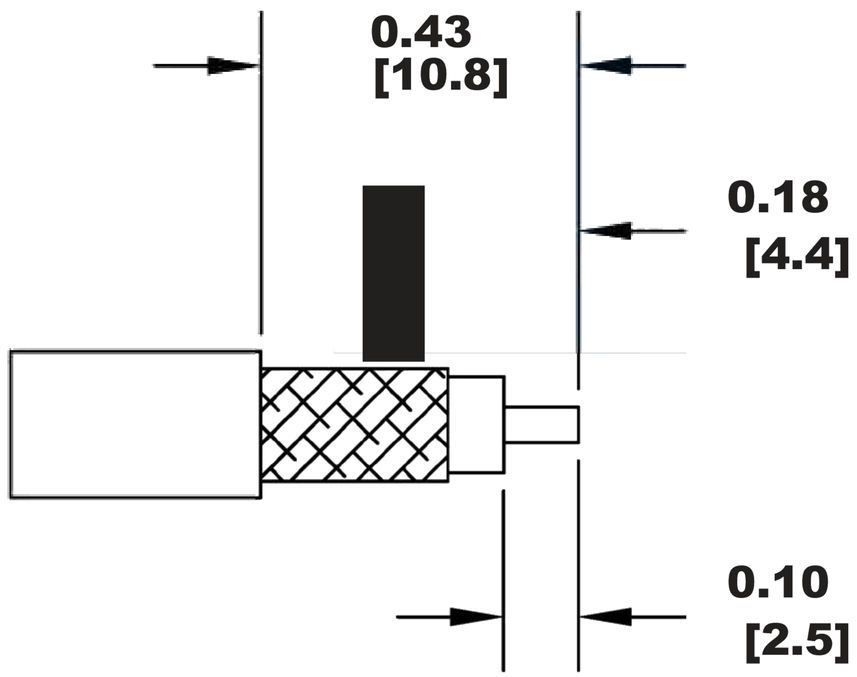

STRIPPING DIMENSIONS

CRIMP SIZE REQUIRED

CONTACT: SOLDER
FERRULE: SOLDER

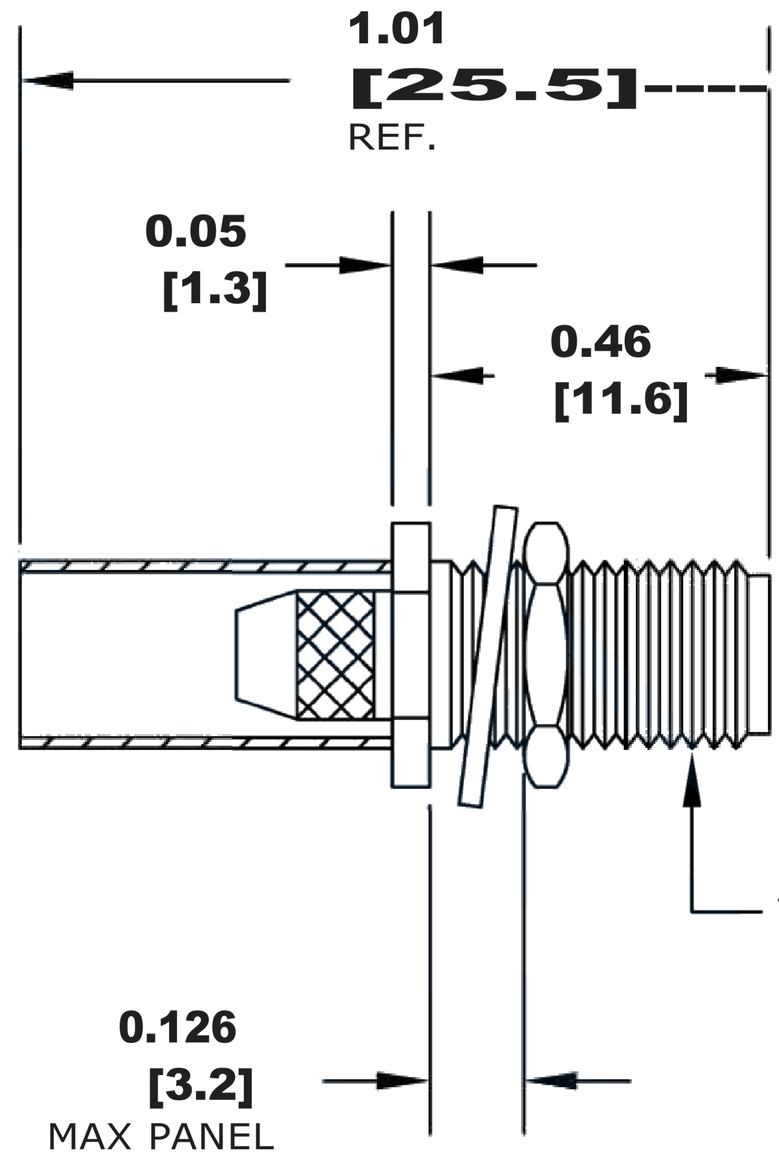

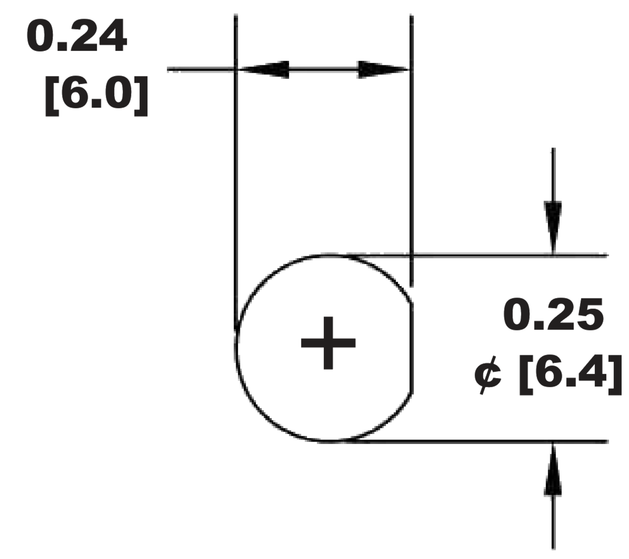

MOUNTING HOLE

IPE/ Ebeestock

8th Floor, Building 1, Yongfu Science and Technology Center Industrial Park
P.O. Box 16759I Irvine | CA 192623
Phone: (949) 261-1920 | Fax: (949) 261-7451
Website: | E-Mail: sales@Ebeestock.com

DWG TITLE
ET11165

NOTES:
1. UNLESS OTHERWISE SPECIFIED ALL DIMENSIONS ARE NOMINAL.
2. ALL SPECIFICATIONS ARE SUBJECT TO CHANGE WITHOUT NOTICE AT ANY TIME.
3. DIMENSIONS ARE IN INCHES (mm].
4. FITS MIL•C-17 AND EQUIVALENT CABLES.

FSCM NO. 53919	CAD FILE 122313	SCALE N/A	SIZE A	2233