SMA Male Connector Clamp/Solder Attachment for ET-RG180, ET-RG195, ET38360

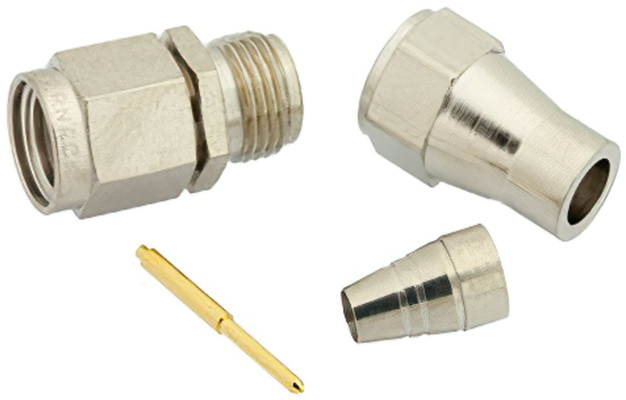

RF Connectors Technical Data Sheet ET11169

Configuration

- SMA Male Connector
- 50 Ohms
- Straight Body Geometry
- ET-RG180, ET-RG195, ET38360 Interface Type
- Clamp/Solder Attachment
- 5/16 inch Hex

Features

- Gold Plated Contact

Applications

- General Purpose Test
- Custom Cable Assemblies

Description

Ebeestock's ET11169 SMA male connector with clamp/solder attachment for ET-RG180, ET-RG195 and ET38360 is part of our full line of RF components available for same-day shipping.

Our SMA male connector ET11169 datasheet specifications and drawing with dimensions are shown below in this PDF. Ebeestock's broad catalog of RF, microwave and millimeter wave connectors allows designers to configure and customize their signal connections however they like. Whether the need is to provide an I/O for a board design, or simply create a custom cable assembly configuration, Ebeestock has the right connector for the job. Ebeestock can also expertly build your custom cable assemblies for you and ship same-day.

Mechanical Specifications

Size

Length	0.965 in [24.51 mm]
Width/Dia.	0.312 in [7.92 mm]
Weight	0.013 lbs [5.9 g]
Mating Torque	3 to 5 in-lbs [0.34 to 0.57 Nm]

Material Specifications

Description	Material	Plating
Contact		Gold
Insulation	PTFE	
Body	Brass	Nickel
Coupling Nut	Brass	Nickel

Click the following link (or enter part number in "SEARCH" on website) to obtain additional part information including price, inventory and certifications: SMA Male Connector Clamp/Solder Attachment for ET-RG180, ET-RG195, ET38360 ET11169

8th Floor, Building 1, Yongfu Science and Technology Center Industrial Park,
Nanzha District 5, Humen,523900, Dongguan, Guangdong, China.

Webstie:www.ebeestock.com Email:sales@ebeestock.com

© 2022 Ebeestock Enterprises All Rights Reserved

SMA Male Connector Clamp/Solder Attachment for ET-RG180, ET-RG195, ET38360

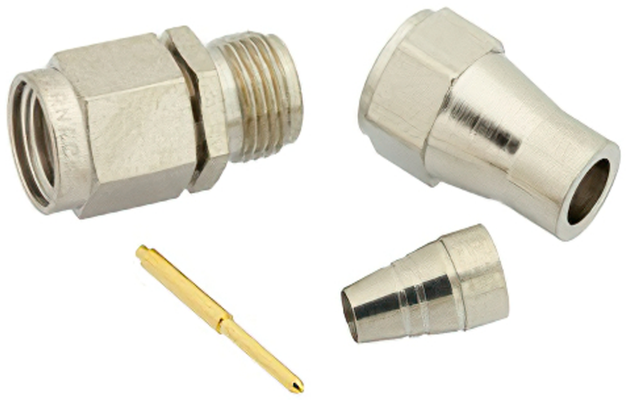

RF Connectors Technical Data Sheet ET11169

Compliance Certifications (see product page for current document)

Plotted and Other Data

Notes:

SMA Male Connector Clamp/Solder Attachment for ET-RG180, ET-RG195, ET38360 from Ebeestock Enterprises has same day shipment for domestic and International orders. Our RF, microwave and millimeter wave products maintain a 99% availability and are part of the broadest selection in the industry.

Click the following link (or enter part number in “SEARCH” on website) to obtain additional part information including price, inventory and certifications: SMA Male Connector Clamp/Solder Attachment for ET-RG180, ET-RG195, ET38360 ET11169

URL: https://www.ebeestock.com/sma-male-connector-clamp-solder-attachment-for-rg180-rg195-pe-b150-0011169

The information contained in this document is accurate to the best of our knowledge and representative of the part described herein. It may be necessary to make modifications to the part and/or the documentation of the part, in order to implement improvements. Ebeestock reserves the right to make such changes as required. Unless otherwise stated, all specifications are nominal. Ebeestock does not make any representation or warranty regarding the suitability of the part described herein for any particular purpose, and Ebeestock does not assume any liability arising out of the use of any part or documentation.

8th Floor, Building 1, Yongfu Science and Technology Center Industrial Park,
Nanzha District 5, Humen,523900, Dongguan, Guangdong, China.

Webstie:www.ebeestock.com Email:sales@ebeestock.com

© 2022 Ebeestock Enterprises All Rights Reserved

ET11169 CAD Drawing

SMA Male Connector Clamp/Solder Attachment for ET-RG180, ET-RG195, ET38360

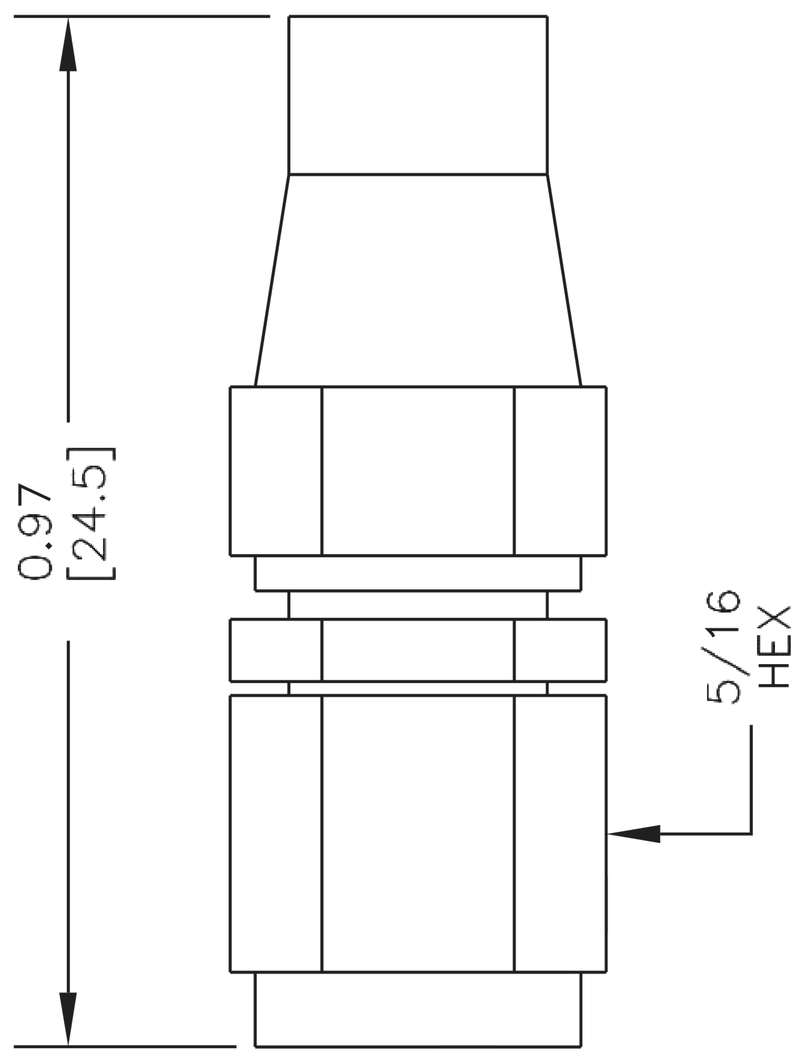

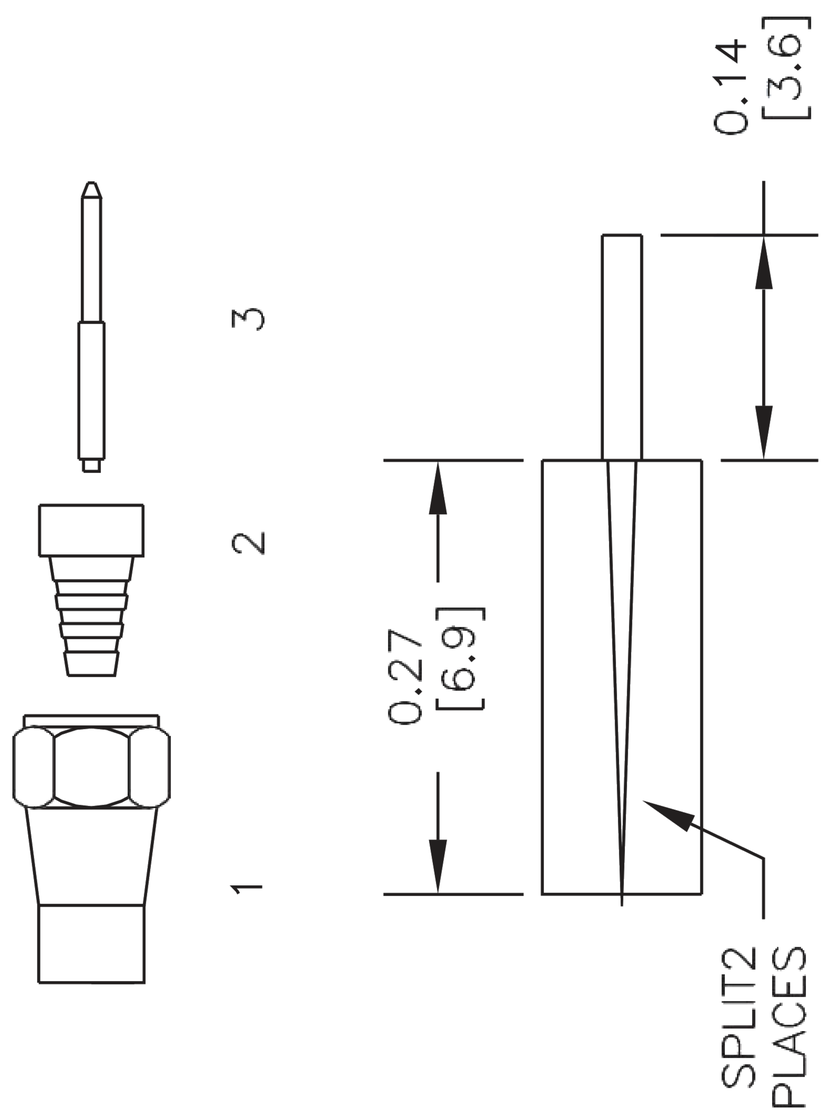

STRIPPING DIMENSIONS

ASSEMBLY PROCEDURES

1. SLIDE CLAMP NUT (1) OVER CABLE. STRIP CABLE AS SHOWN. DO NOT NICK CENTER CONDUCTOR. TIN CENTER CONDUCTOR. SLIT JACKET IN 2 PLACES.
2. FLAIR BRAID AND INSERT CONE ASSEMBLY (2) SLIDING UNDER BRAID. DIELECTRIC MUST SEAT AGAINST INSULATOR IN CONE ASSEMBLY WITH CENTER CONDUCTOR PROTRUDING THROUGH HOLE IN INSULATOR.
3. INSERT CONTACT INTO THE HOLE IN THE INSULATOR. SOLDER CONTACT AND CENTER CONDUCTOR THROUGH HOLE IN CONTACT.
4. INSTALL CABLE ASSEMBLY INTO BODY & TIGHTEN.

NOTES:
1. UNLESS OTHERWISE SPECIFIED ALL DIMENSIONS ARE NOMINAL.
2. ALL SPECIFICATIONS ARE SUBJECT TO CHANGE WITHOUT NOTICE AT ANY TIME.
3. DIMENSIONS ARE IN INCHES [mm].
4. FITS MIL-C-17 AND EQUIVALENT CABLES.

DWG TITLE	REV. -	FSCM NO. 53919	CAD FILE 051302	SCALE N/A	SIZE A	2233
ET11169						

ebeestock
Ebeestock.com
8th Floor, Building 1, Yongfu Science and Technology Center Industrial Park, Nanzha District 5, Humen,523900, Dongguan, Guangdong, China.
Webstie: www.ebeestock.com Email: sales@ebeestock.com

© 2022 Ebeestock Enterprises All Rights Reserved

© 2022 Ebeestock Enterprises All Rights Reserved