SMA Female Bulkhead Mount Connector Crimp/Solder Attachment

for ET-ET-RG174, ET-RG316, ET-RG188, 0.100 inch, ET-B100, ET-C100, ET-LMR-100, .235 inc

RF Connectors Technical Data Sheet ET11273

Configuration

- SMA Female Connector
- 50 Ohms
- Straight Body Geometry
- ET-RG174, ET-RG316, ET-RG188, 0.100 inch, ET-B100, ET-C100, ET-LMR-100 Interface Type
- Crimp/Solder Attachment
- Bulkhead

Features

- Max. Operating Frequency 12.4 GHz
- Gold Plated Beryllium Copper Contact

Applications

- General Purpose Test
- Rack and Panel Mount Applications
- Custom Cable Assemblies

Description

Ebeestock's ET11273 SMA female bulkhead connector with crimp/solder attachment for ET-RG174, ET-RG316, ET-RG188, 0.100 inch, ET-B100, ET-C100 and ET-LMR-100 (.235 inch D hole) is part of our full line of RF components available for same-day shipping. Our SMA female connector operates up to a maximum frequency of 12.4 GHz. This SMA bulkhead connector allows designers to create external connections on their product enclosures, and can be used in a variety of other rack mount and panel mount applications.

Our SMA female bulkhead connector ET11273 datasheet specifications and drawing with dimensions are shown below in this PDF. Ebeestock's broad catalog of RF, microwave and millimeter wave connectors allows designers to configure and customize their signal connections however they like. Whether the need is to provide an I/O for a board design, or simply create a custom cable assembly configuration, Ebeestock has the right connector for the job. Ebeestock can also expertly build your custom cable assemblies for you and ship same-day.

Electrical Specifications

Description	Minimum	Typical	Maximum	Units
Frequency Range	DC		12.4	GHz

Mechanical Specifications

Size	
Length	0.875 in [22.23 mm]
Width/Dia.	0.433 in [11.00 mm]
Weight	0.012 lbs [5.44 g]

Click the following link (or enter part number in "SEARCH" on website) to obtain additional part information including price, inventory and certifications: SMA Female Bulkhead Mount Connector Crimp/Solder Attachment for ET-RG174, ET-

8th Floor, Building 1, Yongfu Science and Technology Center Industrial Park,
Nanzha District 5, Humen,523900, Dongguan, Guangdong, China.

Webstie:www.ebeestock.com Email:sales@ebeestock.com

© 2022 Ebeestock Enterprises All Rights Reserved

SMA Female Bulkhead Mount Connector Crimp/Solder Attachment

for ET-ET-RG174, ET-RG316, ET-RG188, 0.100 inch, ET-B100, ET-C100, ET-LMR-100, .235 inc

RG316, ET-RG188, 0.100 inch, ET-B100, ET-C100, ET-LMR-100, .235 inch D Hole

8th Floor, Building 1, Yongfu Science and Technology Center Industrial Park,
Nanzha District 5, Humen,523900, Dongguan, Guangdong, China.

Webstie:www.ebeestock.com Email:sales@ebeestock.com

© 2022 Ebeestock Enterprises All Rights Reserved

SMA Female Bulkhead Mount Connector Crimp/Solder Attachment

for ET-ET-RG174, ET-RG316, ET-RG188, 0.100 inch, ET-B100, ET-C100, ET-LMR-100, .235 inc

RF Connectors Technical Data Sheet ET11273

Material Specifications

Description	Material	Plating
Contact	Beryllium Copper	Gold
Insulation	PTFE	
Outer Conductor	Brass	Gold
Body	Brass	Gold

Environmental Specifications

Temperature

Operating Range -65 to +165 deg C

Compliance Certifications (see product page for current document)

Plotted and Other Data

Notes:

SMA Female Bulkhead Mount Connector Crimp/Solder Attachment for ET-RG174, ET-RG316, ET-RG188, 0.100 inch, ET-B100, ET- C100, ET-LMR-100, .235 inch D Hole from Ebeestock Enterprises has same day shipment for domestic and International orders. Our RF, microwave and millimeter wave products maintain a 99% availability and are part of the broadest selection in the industry.

Click the following link (or enter part number in “SEARCH” on website) to obtain additional part information including price, inventory and certifications: SMA Female Bulkhead Mount Connector Crimp/Solder Attachment for ET-RG174, ET-RG316, ET-RG188,
0.100 inch, ET-B100, ET-C100, ET-LMR-100, .235 inch D Hole ET11273

URL: https://www.ebeestock.com/sma-female-bulkhead-mount-connector-crimp-solder-attachment-for-rg174-rg316-rg188-0-100-inch-pe-b100-pe-c100-lmr-100-235-inch-d-hole-0011273

The information contained in this document is accurate to the best of our knowledge and representative of the part described herein. It may be necessary to make modifications to the part and/or the documentation of the part, in order to implement improvements. Ebeestock reserves the right to make such changes as required. Unless otherwise stated, all specifications are nominal. Ebeestock does not make any representation or warranty regarding the suitability of the part described herein for any particular purpose, and Ebeestock does not assume any liability arising out of the use of any part or documentation.

8th Floor, Building 1, Yongfu Science and Technology Center Industrial Park,
Nanzha District 5, Humen,523900, Dongguan, Guangdong, China.

Webstie:www.ebeestock.com Email:sales@ebeestock.com

© 2022 Ebeestock Enterprises All Rights Reserved

ET11273 CAD Drawing

SMA Female Bulkhead Mount Connector Crimp/Solder Attachment for ET-RG174, ET-RG316, ET-RG188, 0.100 inch, ET-B100, ET-C100, ET-LMR-100, .235 inch D Hole

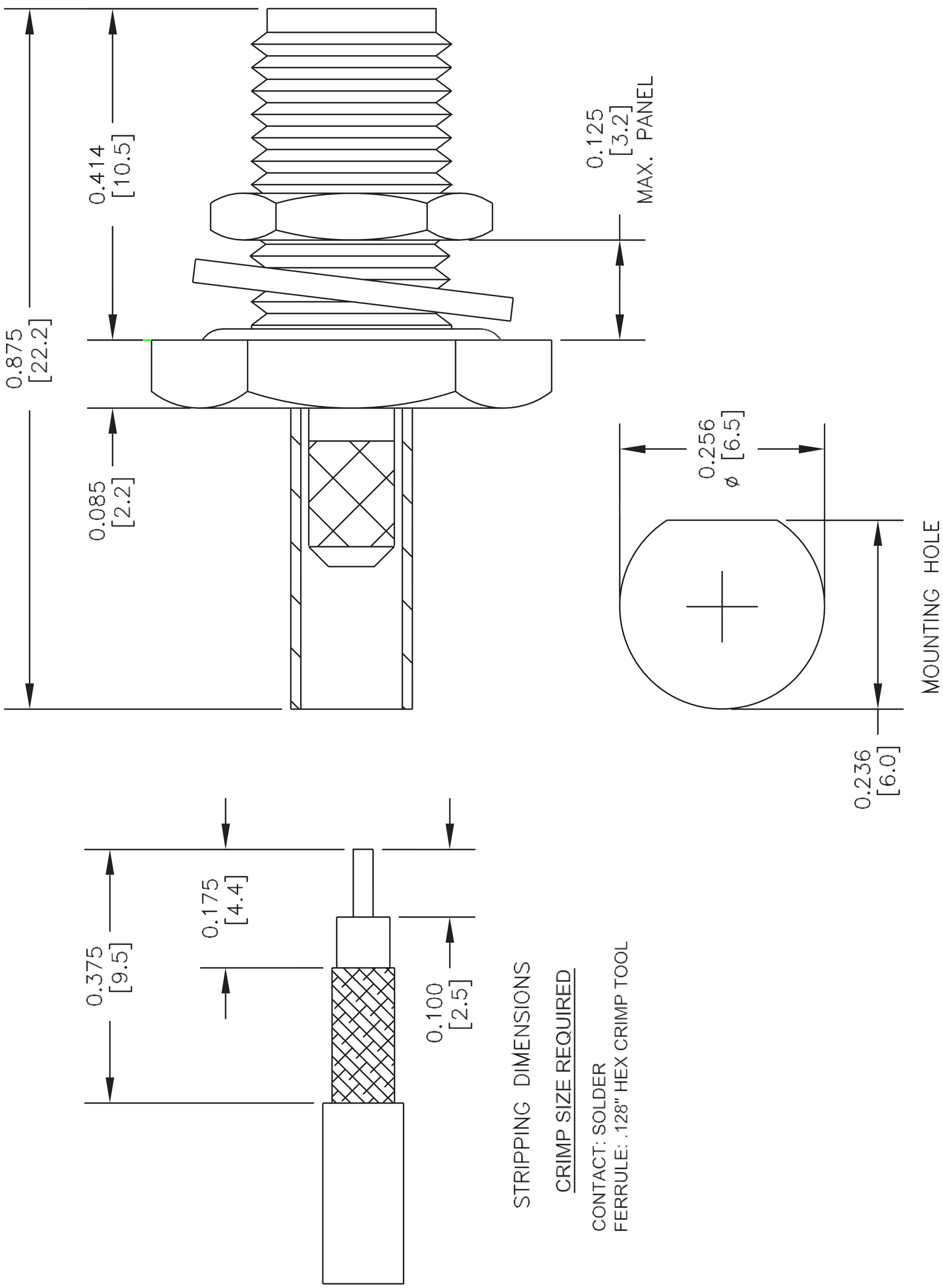

NOTES:
1. UNLESS OTHERWISE SPECIFIED ALL DIMENSIONS ARE NOMINAL.
2. ALL SPECIFICATIONS ARE SUBJECT TO CHANGE WITHOUT NOTICE AT ANY TIME.
3. DIMENSIONS ARE IN INCHES [mm].
4. FITS MIL-C-17 AND EQUIVALENT CABLES.

DWG TITLE	CAD FILE	SCALE N/A	SIZE A	2233
ET11273	FSCM NO. 53919	032916		

ebeestock
Ebeestock.com
8th Floor, Building 1, Yongfu Science and Technology Center Industrial Park, Nanzha District 5, Humen,523900, Dongguan, Guangdong, China.
Webstie: www.ebeestock.com Email: sales@ebeestock.com

© 2022 Ebeestock Enterprises All Rights Reserved

© 2022 Ebeestock Enterprises All Rights Reserved