SMA Female Connector Crimp/Solder Attachment for ET38331, ET 38330, ET38329, ET38378, ET38378-DB, ET38378-UF, 0.400 inch

RF Connectors Technical Data Sheet

ET11278

Configuration

- SMA Female Connector
- 50 Ohms
- Straight Body Geometry
- ET38331, ET38330, ET38329, ET38378, ET38378-DB, ET38375, 0.400 inch Interface Type
- Crimp/Solder Attachment

Features

- Gold Plated Brass Contact

Applications

- General Purpose Test
- Custom Cable Assemblies

Description

Ebeestock's ET11278 SMA female connector with crimp/solder attachment for ET38331, ET38330, ET38329, ET38378, ET38376, ET38375 and 0.400 inch is part of our full line of RF components available for same-day shipping.

Our SMA female connector ET11278 datasheet specifications and drawing with dimensions are shown below in this PDF. Ebeestock's broad catalog of RF, microwave and millimeter wave connectors allows designers to configure and customize their signal connections however they like. Whether the need is to provide an I/O for a board design, or simply create a custom cable assembly configuration, Ebeestock has the right connector for the job. Ebeestock can also expertly build your custom cable assemblies for you and ship same-day.

Mechanical Specifications

Size

Length	1.708 in [43.38 mm]
Width/Dia.	0.71 in [18.03 mm]
Weight	0.068 lbs [30.84 g]

Material Specifications

Description	Material	Plating
Contact	Brass	Gold
Insulation	PTFE	
Body	Brass	Gold

Click the following link (or enter part number in "SEARCH" on website) to obtain additional part information including price, inventory and certifications: SMA Female Connector Crimp/Solder Attachment for ET38331, ET38330, ET38329, LMR-400, ET38376, ET38375, 0.400 inch ET11278

8th Floor, Building 1, Yongfu Science and Technology Center Industrial Park,
Nanzha District 5, Humen,523900, Dongguan, Guangdong, China.

Webstie:www.ebeestock.com Email:sales@ebeestock.com

© 2022 Ebeestock Enterprises All Rights Reserved

SMA Female Connector Crimp/Solder Attachment for ET38331, ET 38330, ET38329, ET38378, ET38378-DB, ET38378-UF, 0.400 inch

RF Connectors Technical Data Sheet ET11278

Compliance Certifications (see product page for current document)

Plotted and Other Data

Notes:

SMA Female Connector Crimp/Solder Attachment for ET38331, ET38330, ET38329, ET38378, ET38376, ET38375, 0.400 inch from Ebeestock Enterprises has same day shipment for domestic and International orders. Our RF, microwave and millimeter wave products maintain a 99% availability and are part of the broadest selection in the industry.

Click the following link (or enter part number in “SEARCH” on website) to obtain additional part information including price, inventory and certifications: SMA Female Connector Crimp/Solder Attachment for ET38331, ET38330, ET38329, ET38378, ET38376, ET38375, 0.400 inch ET11278

URL: https://www.ebeestock.com/sma-female-connector-crimp-solder-attachment-for-pe-c400-pe-b400-pe-b405-lmr-400-lmr-400-db-lmr-400-uf-0-400-inch-0011278

The information contained in this document is accurate to the best of our knowledge and representative of the part described herein. It may be necessary to make modifications to the part and/or the documentation of the part, in order to implement improvements. Ebeestock reserves the right to make such changes as required. Unless otherwise stated, all specifications are nominal. Ebeestock does not make any representation or warranty regarding the suitability of the part described herein for any particular purpose, and Ebeestock does not assume any liability arising out of the use of any part or documentation.

8th Floor, Building 1, Yongfu Science and Technology Center Industrial Park,
Nanzha District 5, Humen,523900, Dongguan, Guangdong, China.

Webstie:www.ebeestock.com Email:sales@ebeestock.com

© 2022 Ebeestock Enterprises All Rights Reserved

© 2022 Ebeestock Enterprises All Rights Reserved

www.ebeestock.com

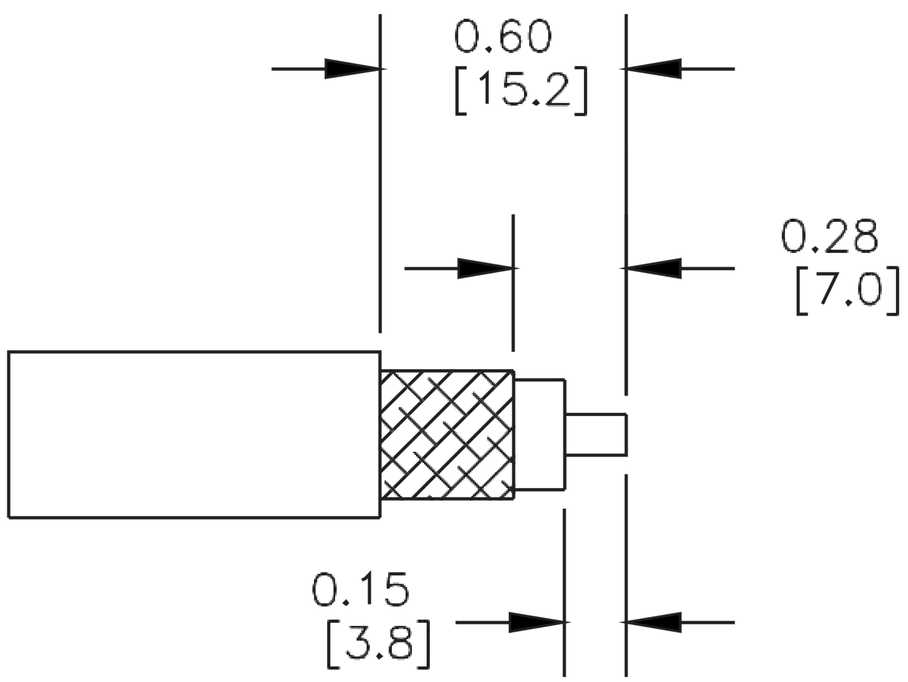

STRIPPING DIMENSIONS

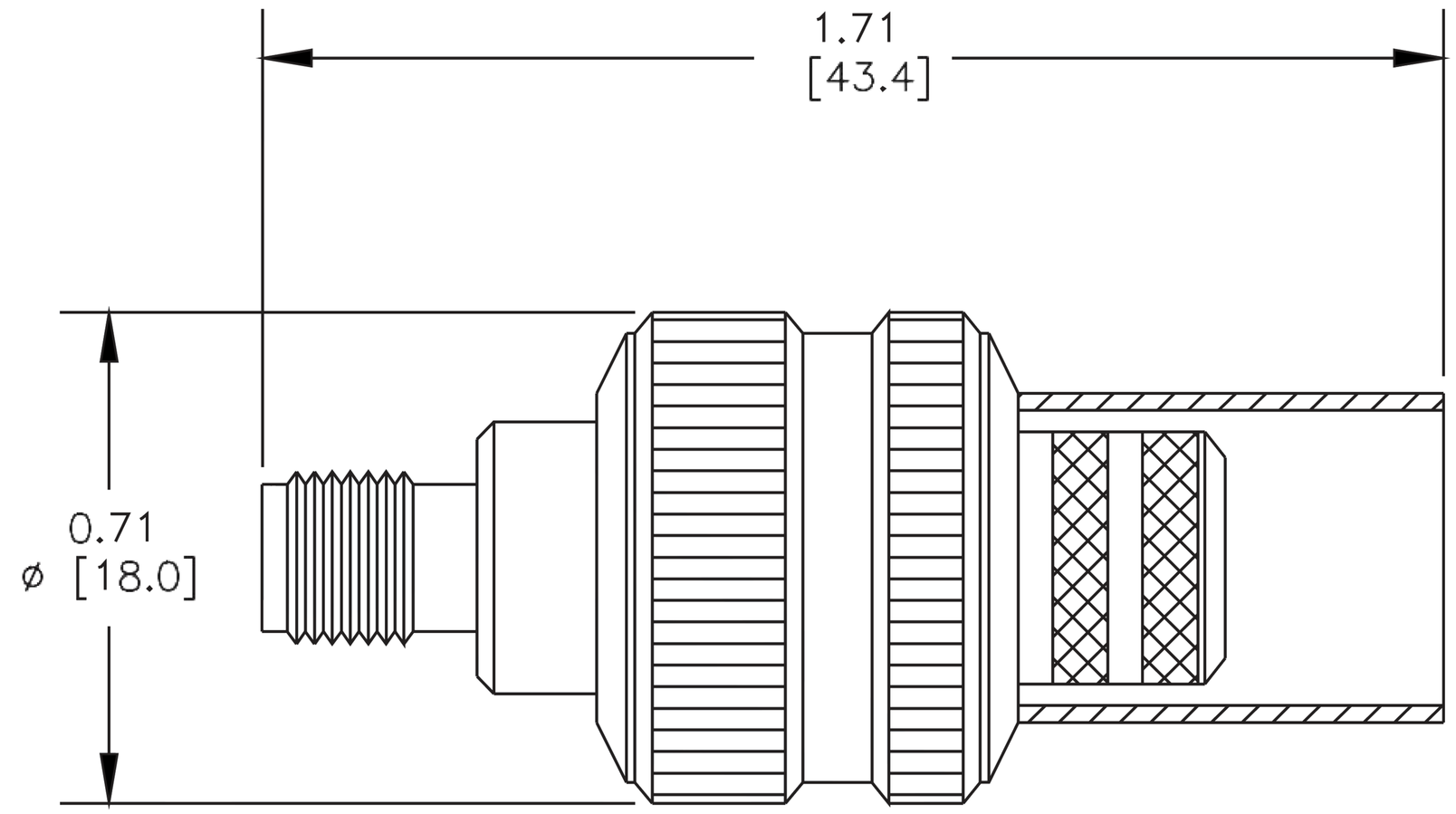

CRIMP SIZE REQUIRED

CONTACT: SOLDER
FERRULE: .429" HEX CRIMP TOOL

ebeestock
Ebeestock.com
8th Floor, Building 1, Yongfu Science
and Technology Center Industrial Park,
Nanzha District 5, Humen,523900, Dongguan, Guangdong, China.
Webstie: www.ebeestock.com **Email:** sales@ebeestock.com

DWG TITLE

ET11278

NOTES:
1. UNLESS OTHERWISE SPECIFIED ALL DIMENSIONS ARE NOMINAL.
2. ALL SPECIFICATIONS ARE SUBJECT TO CHANGE WITHOUT NOTICE AT ANY TIME.
3. DIMENSIONS ARE IN INCHES [mm].
4. FITS MIL-C-17 AND EQUIVALENT CABLES.

REV. -	FSCM NO. 53919	CAD FILE 102009	SCALE N/A	SIZE A	147