SMA Female Connector Solder Attachment for ET38321, ET38322, ET38322J, ET38340, ET-RG405

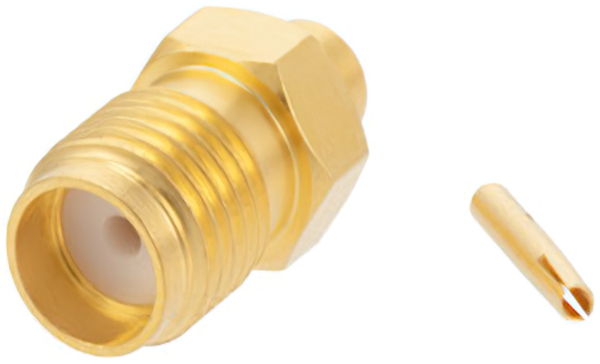

RF Connectors Technical Data Sheet

ET11283

Configuration

- SMA Female Connector
- 50 Ohms
- Straight Body Geometry
- Connector Interface Types: ET38321, ET-SR-405FL, ET38323, ET38340, ET-RG405

Features

- Max. Operating Frequency 18 GHz
- Gold over Nickel Plated Beryllium Copper Contact

Applications

- General Purpose Test
- Custom Cable Assemblies

Description

Ebeestock's ET11283 SMA female connector with solder/solder attachment for ET38321, ET38322, ET38323, ET38340 and ET-RG405 is part of our full line of RF components available for same-day shipping. Our SMA female connector operates up to a maximum frequency of 18 GHz.

Our SMA female connector ET11283 datasheet specifications and drawing with dimensions are shown below in this PDF. Ebeestock's broad catalog of RF, microwave and millimeter wave connectors allows designers to configure and customize their signal connections however they like. Whether the need is to provide an I/O for a board design, or simply create a custom cable assembly configuration, Ebeestock has the right connector for the job. Ebeestock can also expertly build your custom cable assemblies for you and ship same-day.

Electrical Specifications

Description	Minimum	Typical	Maximum	Units
Frequency Range	DC		18	GHz

Mechanical Specifications

Size	
Length	0.5 in [12.7 mm]
Width/Dia.	0.25 in [6.35 mm]
Weight	0.005 lbs [2.27 g]

Click the following link (or enter part number in "SEARCH" on website) to obtain additional part information including price, inventory and certifications: SMA Female Connector Solder Attachment for ET38321, ET38322, ET38323, ET38340, ET-RG405 ET11283

8th Floor, Building 1, Yongfu Science and Technology Center Industrial Park,
Nanzha District 5, Humen,523900, Dongguan, Guangdong, China.

Webstie:www.ebeestock.com Email:sales@ebeestock.com

© 2022 Ebeestock Enterprises All Rights Reserved

SMA Female Connector Solder Attachment for ET38321, ET38322, ET38322J, ET38340, ET-RG405

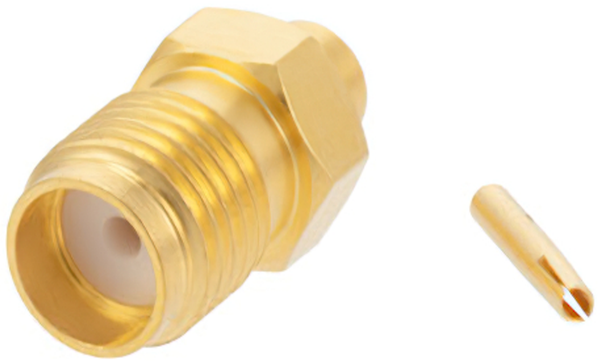

RF Connectors Technical Data Sheet

ET11283

Material Specifications

Description	Material	Plating
Contact	Beryllium Copper	Gold over Nickel
Insulation	PTFE	
Body	Brass	Gold over Nickel

Environmental Specifications

Compliance Certifications (see product page for current document)

Plotted and Other Data

Notes:

SMA Female Connector Solder Attachment for ET38321, ET38322, ET38323, ET38340, ET-RG405 from Ebeestock Enterprises has same day shipment for domestic and International orders. Our RF, microwave and millimeter wave products maintain a 99.4% availability and are part of the broadest selection in the industry.

Click the following link (or enter part number in “SEARCH” on website) to obtain additional part information including price, inventory and certifications: SMA Female Connector Solder Attachment for ET38321, ET38322, ET38323, ET- SR405TN, ET-RG405 ET11283

URL: https://www.ebeestock.com/sma-female-connector-solder-attachment-for-pe-sr405al-pe-sr405fl-pe-sr405flj-pe-sr405tn-rg405-0011283

The information contained in this document is accurate to the best of our knowledge and representative of the part described herein. It may be necessary to make modifications to the part and/or the documentation of the part, in order to implement improvements. Ebeestock reserves the right to make such changes as required. Unless otherwise stated, all specifications are nominal. Ebeestock does not make any representation or warranty regarding the suitability of the part described herein for any particular purpose, and Ebeestock does not assume any liability arising out of the use of any part or documentation.

8th Floor, Building 1, Yongfu Science and Technology Center Industrial Park,
Nanzha District 5, Humen,523900, Dongguan, Guangdong, China.

Webstie:www.ebeestock.com Email:sales@ebeestock.com

© 2022 Ebeestock Enterprises All Rights Reserved

© 2022 Ebeestock Enterprises All Rights Reserved

www.ebeestock.com

REVISIONS			
REV.	DESCRIPTION	DATE	APPROVED
A	PCR ET44690	12/23/2019	S.ELLIS

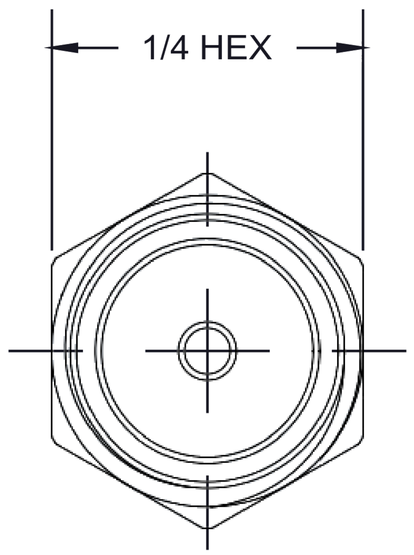

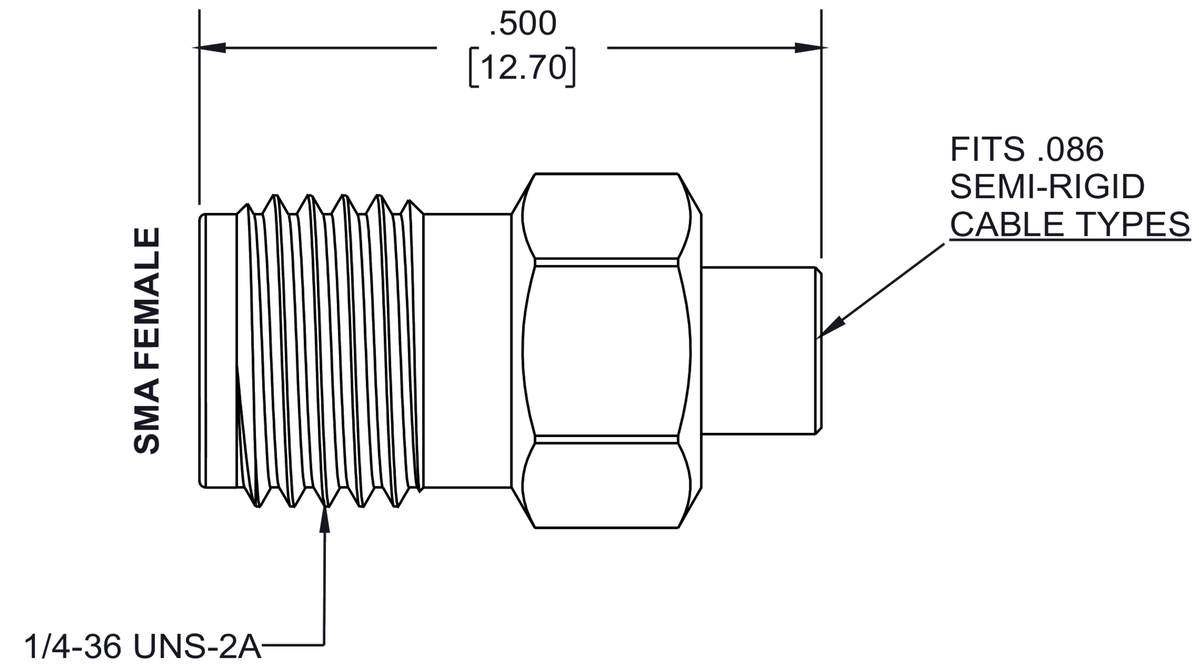

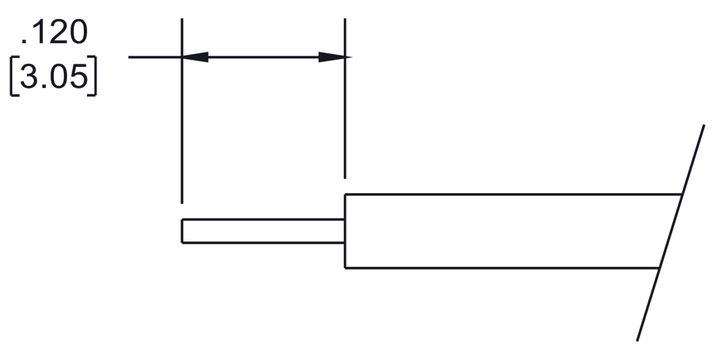

STRIPPING DIMENSIONS

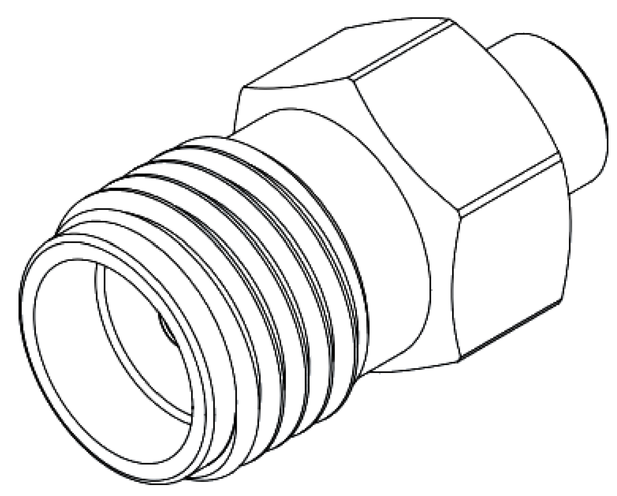

NOTES:

1. CABLE ATTACHMENT:
   - OUTER: SOLDER.
   - INNER: SOLDER.

UNLESS OTHERWISE SPECIFIED
LEADING DIMENSIONS ARE INCHES
DIMENSIONS IN [ ] ARE MILLIMETERS

TOLERANCES:

.X = ±.2	[5.08]	FRACTIONS
.XX = ± .02	[.51]	± 1/32
.XXX = ±.005	[.13]	ANGLES ± 1°

CABLE LENGTH (L) TOLERANCES:

L ≤ 12 [305] = +1 [25] / -0
12 [305] < L ≤ 60 [1524] = +2 [51] / -0
60 [1524] < L ≤ 120 [3048] = +4 [102] / -0
~~120 [3048] < L ≤ 300 [7620] = +6 [152] /~~ -0
300 [7620] < L = +5%L / -0

ALL DIMENSIONS SHOWN
ARE FOR REFERENCE ONLY.

ebeestock
Ebeestock.com
8th Floor, Building 1, Yongfu Science
and Technology Center Industrial Park,
Nanzha District 5, Humen,523900, Dongguan, Guangdong, China.
Webstie: www.ebeestock.com **Email:** sales@ebeestock.com

THIRD-ANGLE PROJECTION

THE INFORMATION AND
DESIGN IN THIS DOCUMENT
IS THE PROPERTY OF
Ebeestock CORPORATION

ALL RIGHTS RESERVED.

SHEET 1 OF 1

SCALE N/A

SIZE	CAGE CODE	DRAWN BY	ITEM NO.	REV
A	53919	K.DANG	ET11283	A

THESE COMMODITIES, TECHNOLOGY OR SOFTWARE WERE EXPORTED FROM THE UNITED STATES IN ACCORDANCE
WITH THE EXPORT ADMINISTRATION REGULATIONS. DIVERSION CONTRARY TO U.S. LAW PROHIBITED.