SMA Male Connector Clamp Attachment Vertical Launch PCB, Removable Stripline Launch

RF Connectors
Technical Data Sheet

ET11361

Configuration

- SMA Male Connector
- 50 Ohms
- Straight Body Geometry
- Vertical Launch Interface Type
- Clamp Attachment

Features

- Max. Operating Frequency 26.5 GHz
- Good VSWR of 1.3:1
- Gold Plated Brass Contact
- Reusable vertical launch installation

Applications

- General Purpose Test
- PCB Applications
- Signal Integrity Measurement
- Chip Evaluations
- SERDES
- Vertical Launch Test Fixtures

Description

Ebeestock's ET11361 SMA male connector with clamp attachment for vertical launch PCB is part of our full line of RF components available for same-day shipping. Our SMA male connector operates up to a maximum frequency of 26.5 GHz and offers good VSWR of 1.3:1.

Our SMA male connector ET11361 datasheet specifications and drawing with dimensions are shown below in this PDF. Ebeestock's broad catalog of RF, microwave and millimeter wave connectors allows designers to configure and customize their signal connections however they like. Whether the need is to provide an I/O for a board design, or simply create a custom cable assembly configuration, Ebeestock has the right connector for the job. Ebeestock can also expertly build your custom cable assemblies for you and ship same-day.

Electrical Specifications

Description	Minimum	Typical	Maximum	Units
Frequency Range	DC		26.5	GHz
VSWR			1.3:1	

Electrical Specification Notes:
Actual VSWR performance is largely dependent on circuit board design. For optimal results, the connector and circuit launch geometry should be modeled using Electromagnetic Simulation tools.

Mechanical Specifications

Size	
Length	0.5 in [12.7 mm]
Width/Dia.	0.315 in [8.00 mm]
Height	0.39 in [9.91 mm]
Mating Cycles	500 Cycles

Click the following link (or enter part number in "SEARCH" on website) to obtain additional part information including price, inventory and certifications: SMA Male Connector Clamp Attachment Vertical Launch PCB, Removable Stripline Launch ET11361

8th Floor, Building 1, Yongfu Science and Technology Center Industrial Park,
Nanzha District 5, Humen,523900, Dongguan, Guangdong, China.

Webstie:www.ebeestock.com Email:sales@ebeestock.com

© 2022 Ebeestock Enterprises All Rights Reserved

SMA Male Connector Clamp Attachment Vertical Launch PCB, Removable Stripline Launch

RF Connectors
Technical Data Sheet

ET11361

Material Specifications

Description	Material	Plating
Contact	Brass	Gold
Insulation	PTFE	
Body	Passivated Stainless Steel	
Coupling Nut	Passivated Stainless Steel	

Mechanical Specification Notes:
Launch Pin is Gold Plated Beryllium Copper

Environmental Specifications

Compliance Certifications (see product page for current document)

Plotted and Other Data

Notes:

Click the following link (or enter part number in “SEARCH” on website) to obtain additional part information including price, inventory and certifications: SMA Male Connector Clamp Attachment Vertical Launch PCB, Removable Stripline Launch ET11361

8th Floor, Building 1, Yongfu Science and Technology Center Industrial Park,
Nanzha District 5, Humen,523900, Dongguan, Guangdong, China.

Webstie:www.ebeestock.com Email:sales@ebeestock.com

© 2022 Ebeestock Enterprises All Rights Reserved

SMA Male Connector Clamp Attachment Vertical Launch PCB, Removable Stripline Launch

RF Connectors
Technical Data Sheet

ET11361

Assembly Instruction

STEP 1 :

Position vertical launch above substrate.

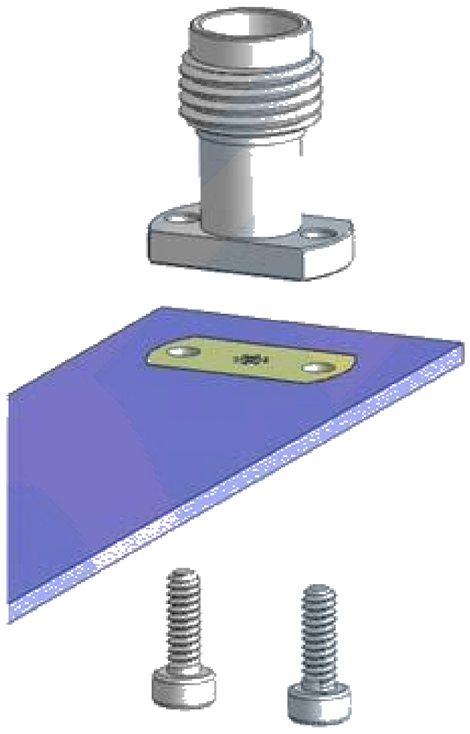

STEP 2:

Insert screws and tighten connector body against the substrate, while ensuring center pin is centered on the trace or landing pad.

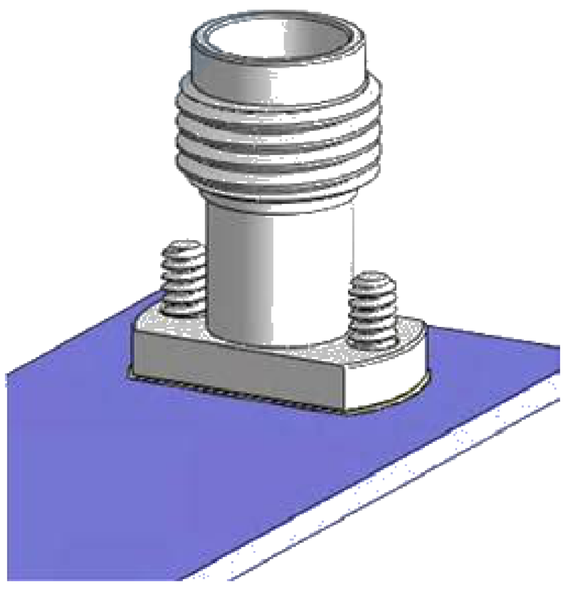

Click the following link (or enter part number in “SEARCH” on website) to obtain additional part information including price, inventory and certifications: SMA Male Connector Clamp Attachment Vertical Launch PCB, Removable Stripline Launch ET11361

8th Floor, Building 1, Yongfu Science and Technology Center Industrial Park,
Nanzha District 5, Humen,523900, Dongguan, Guangdong, China.

Webstie:www.ebeestock.com Email:sales@ebeestock.com

© 2022 Ebeestock Enterprises All Rights Reserved

SMA Male Connector Clamp Attachment Vertical Launch PCB, Removable Stripline Launch

RF Connectors
Technical Data Sheet

ET11361

Typical Performance Data

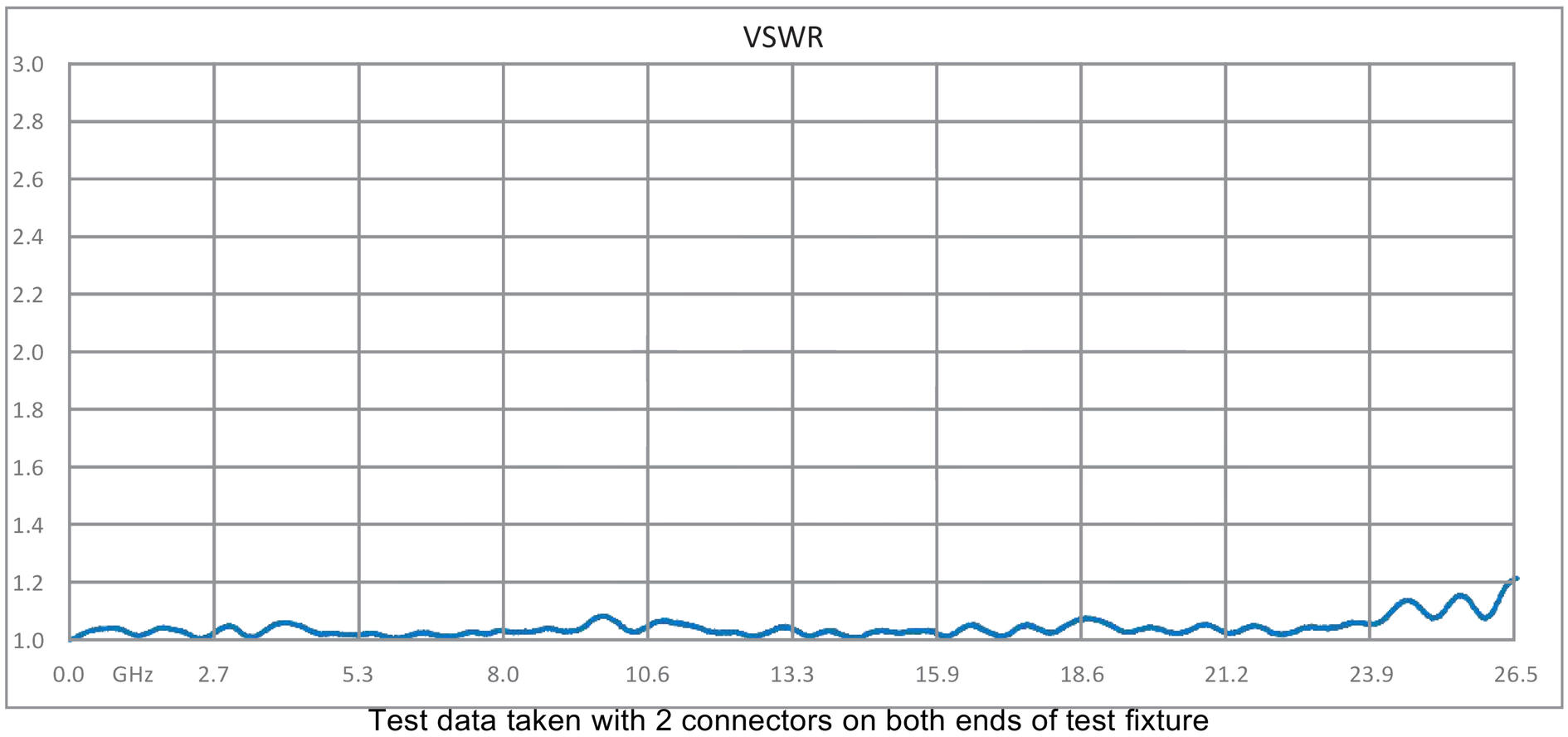

Test data taken with 2 connectors on both ends of test fixture

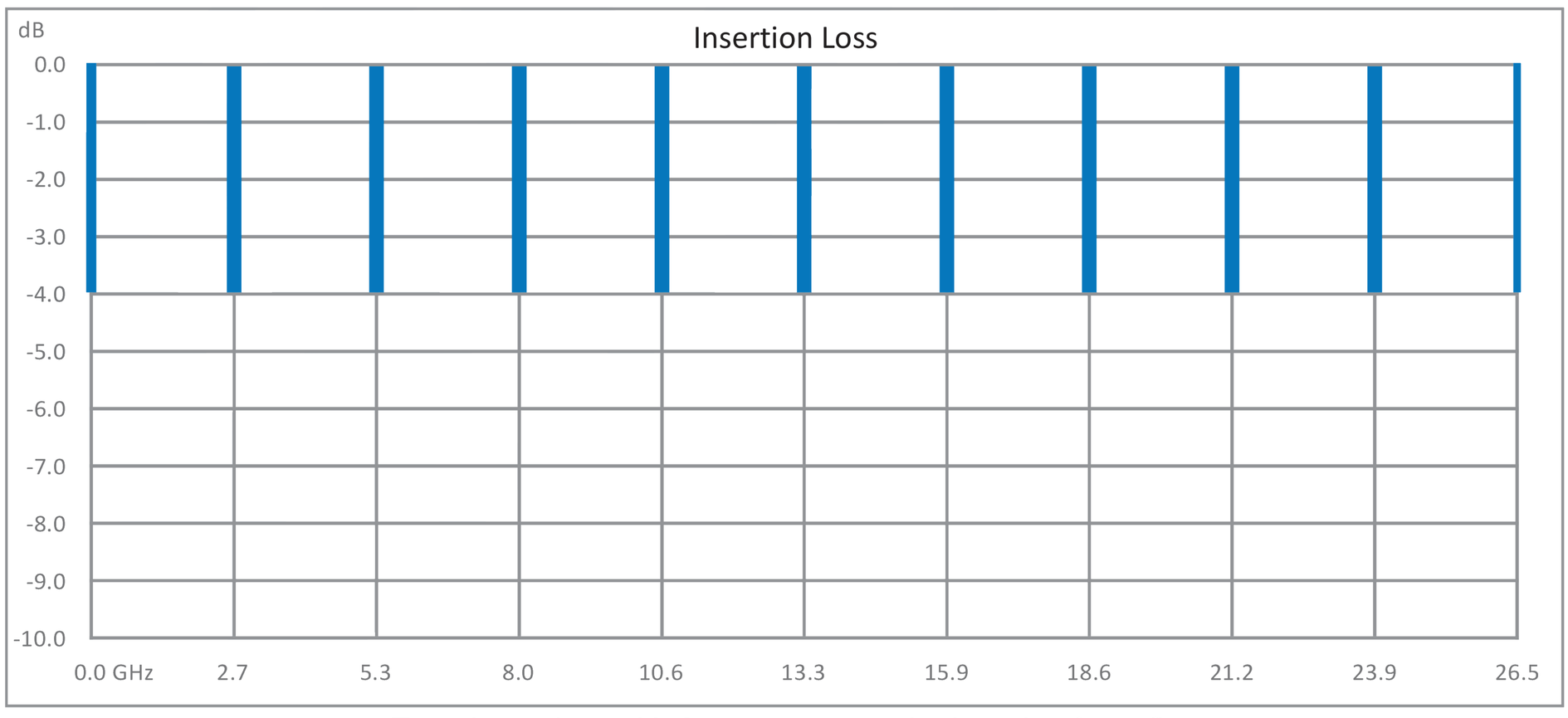

Test data taken with 2 connectors on both ends of test fixture

Click the following link (or enter part number in “SEARCH” on website) to obtain additional part information including price, inventory and certifications: SMA Male Connector Clamp Attachment Vertical Launch PCB, Removable Stripline Launch ET11361

8th Floor, Building 1, Yongfu Science and Technology Center Industrial Park,
Nanzha District 5, Humen,523900, Dongguan, Guangdong, China.

Webstie:www.ebeestock.com Email:sales@ebeestock.com

© 2022 Ebeestock Enterprises All Rights Reserved

SMA Male Connector Clamp Attachment Vertical Launch PCB, Rem
ovable Stripline Launch

RF Connectors
Technical Data Sheet

ET11361

SMA Male Connector Clamp Attachment Vertical Launch PCB, Removable Stripline Launch from Ebeestock Enterprises has same day shipment for domestic and International orders. Our RF, microwave and millimeter wave products maintain a 99.4% availability and are part of the broadest selection in the industry.

Click the following link (or enter part number in “SEARCH” on website) to obtain additional part information including price, inventory and certifications: SMA Male Connector Clamp Attachment Vertical Launch PCB, Removable Stripline Launch ET11361

URL: https://www.ebeestock.com/sma-male-connector-clamp-attachment-vertical-launch-pcb-removabl
e-stripline-launch-0011361

The information contained in this document is accurate to the best of our knowledge and representative of the part described herein. It may be necessary to make modifications to the part and/or the documentation of the part, in order to implement improvements. Ebeestock reserves the right to make such changes as required. Unless otherwise stated, all specifications are nominal. Ebeestock does not make any representation or warranty regarding the suitability of the part described herein for any particular purpose, and Ebeestock does not assume any liability arising out of the use of any part or documentation.

8th Floor, Building 1, Yongfu Science and Technology Center Industrial Park,
Nanzha District 5, Humen,523900, Dongguan, Guangdong, China.

Webstie:www.ebeestock.com Email:sales@ebeestock.com

© 2022 Ebeestock Enterprises All Rights Reserved

© 2022 Ebeestock Enterprises All Rights Reserved

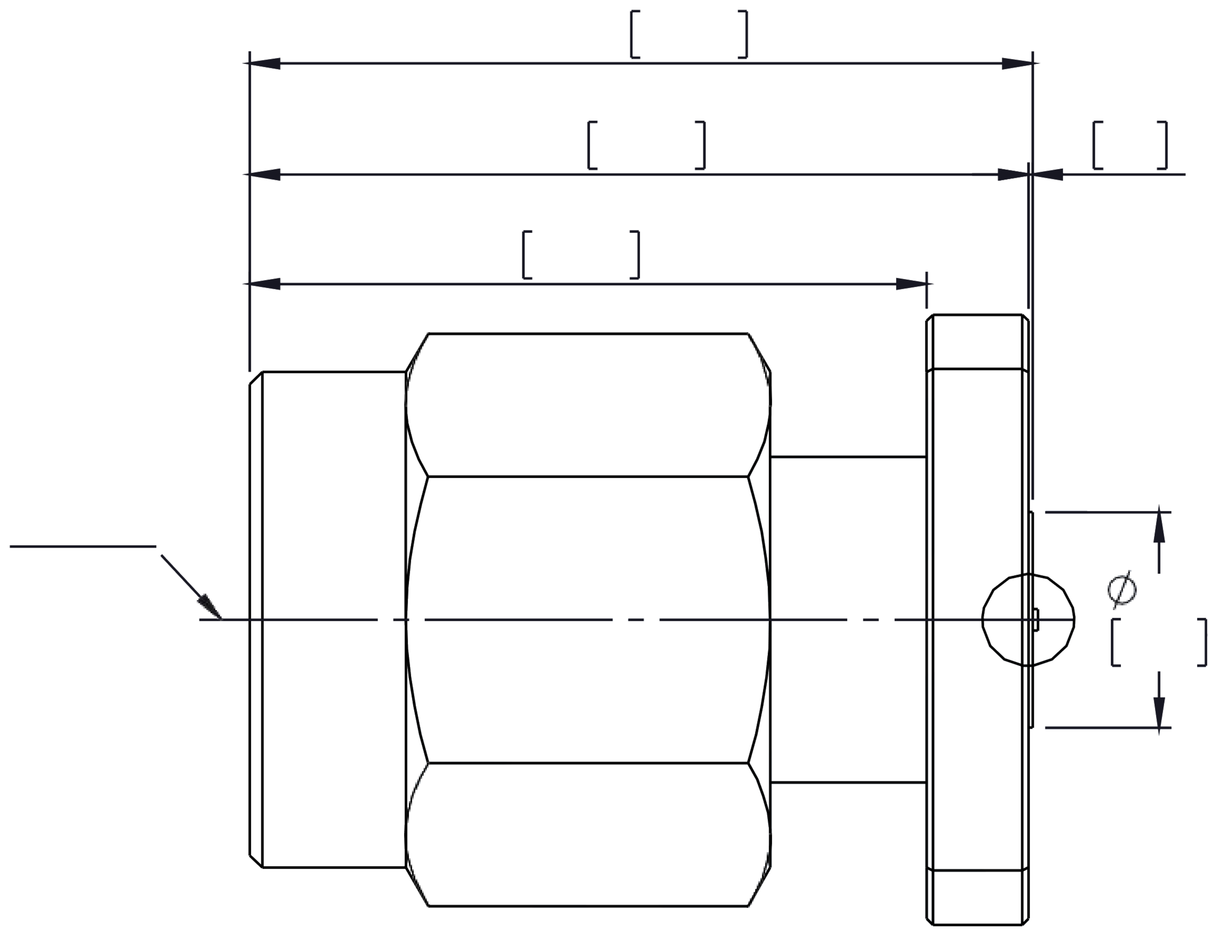

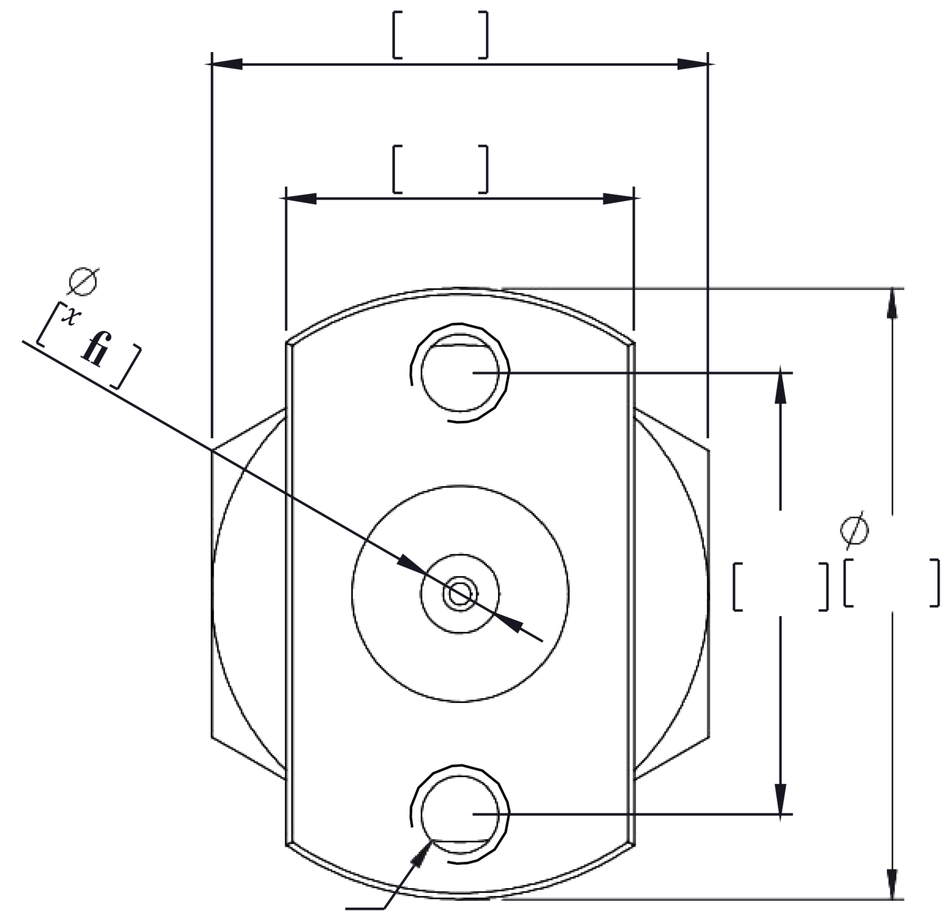

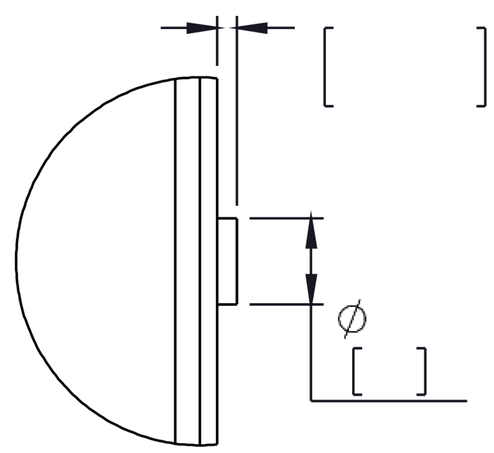

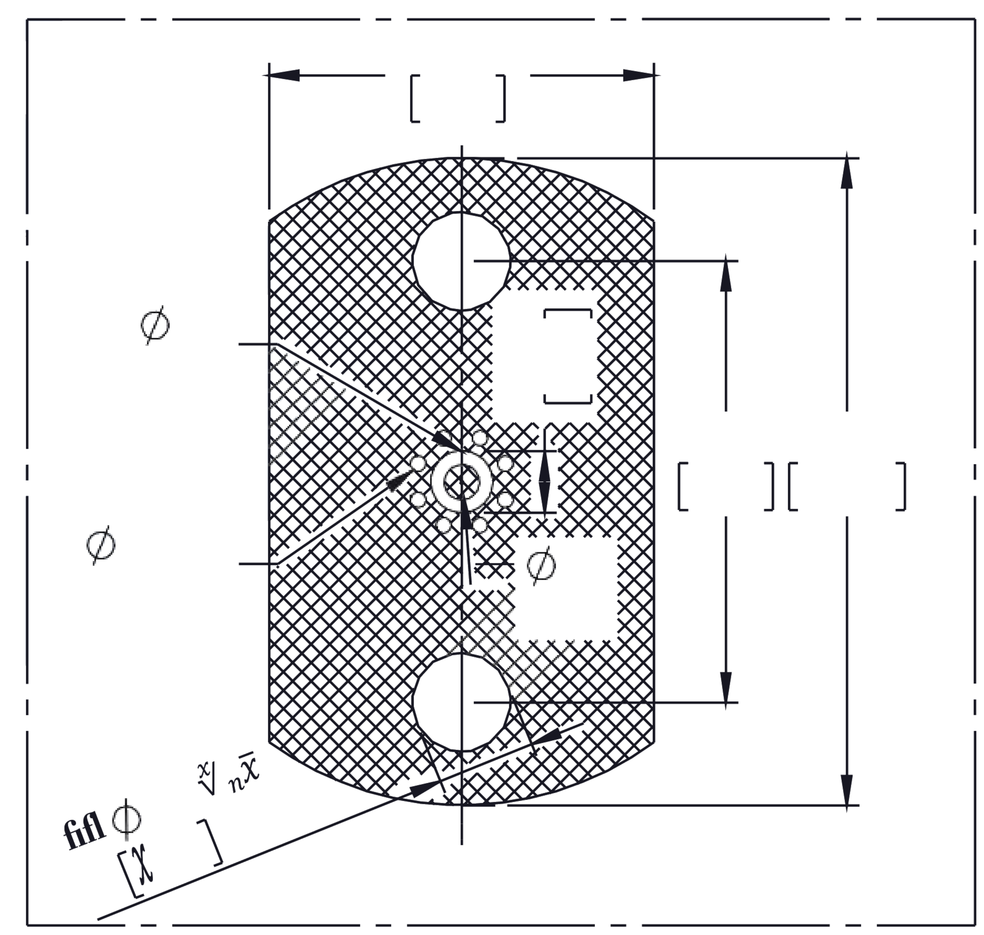

*STANDARD TOLERANCES APPLY
ONLY TO DIMENSIONS IN INCHES

ebeestock
Ebeestock.com
8th Floor, Building 1, Yongfu Science
and Technology Center Industrial Park,
Nanzha District 5, Humen,523900, Dongguan, Guangdong, China.
Webstie: www.ebeestock.com **Email:** sales@ebeestock.com

DWG TITLE	NOTES: 1. UNLESS OTHERWISE SPECIFIED ALL DIMENSIONS ARE NOMINAL. 2. ALL SPECIFICATIONS ARE SUBJECT TO CHANGE WITHOUT NOTICE AT ANY TIME 3. DIMENSIONS ARE IN INCHES [mm].		
CAGE CODE 53919	CAD FILE	SCALE N/A	SIZE A