SMA Female Field Replaceable Connector 2 Hole Flange Mount 0 .015 inch Pin, .355 inch Hole Spacing with Metal Contact Ring

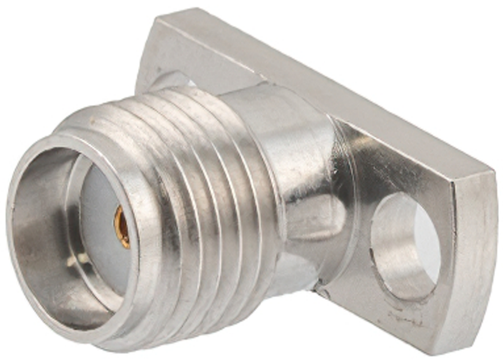

RF Connectors Technical Data Sheet

ET11391

Configuration

- SMA Female Connector
- Straight Body Geometry
- Connector Interface Types: 0.015 inch Pin
- 2 Hole Flange

Features

- Max. Operating Frequency 27 GHz
- Excellent VSWR of 1.2:1
- Gold Plated Beryllium Copper Contact
- Metal Contact Ring

Applications

- General Purpose Test
- Rack and Panel Mount Applications
- Used in Product Requiring Hermetic Seals
- Allows for Replacement of Damaged Connectors

Description

Ebeestock's ET11391 SMA female 2 hole flange mount field replaceable connector is part of our full line of RF components available for same-day shipping. Our SMA female connector operates up to a maximum frequency of 27 GHz and offers excellent VSWR of 1.2:1. This SMA 2 hole flange connector allows designers to create external connections on their product enclosures, and can be used in a variety of other rack mount and panel mount applications. This field replaceable connector is easy to install or replace in the field.

Our SMA female 2 hole flange connector ET11391 datasheet specifications and drawing with dimensions are shown below in this PDF. Ebeestock's broad catalog of RF, microwave and millimeter wave connectors allows designers to configure and customize their signal connections however they like. Whether the need is to provide an I/O for a board design, or simply create a custom cable assembly configuration, Ebeestock has the right connector for the job. Ebeestock can also expertly build your custom cable assemblies for you and ship same-day.

Electrical Specifications

Description	Minimum	Typical	Maximum	Units
Frequency Range	DC		27	GHz
VSWR			1.2:1	

Mechanical Specifications

Size	
Length	0.372 in [9.45 mm]
Width/Dia.	0.25 in [6.35 mm]
Height	0.5 in [12.7 mm]
Weight	0.004 lbs [1.81 g]
Mating Cycles	500 Cycles

Click the following link (or enter part number in "SEARCH" on website) to obtain additional part information including price, inventory and certifications: SMA Female Field Replaceable Connector 2 Hole Flange Mount 0.015 inch Pin, .355 inch Hole Spacing with Metal Contact Ring ET11391

8th Floor, Building 1, Yongfu Science and Technology Center Industrial Park,
Nanzha District 5, Humen,523900, Dongguan, Guangdong, China.

Webstie:www.ebeestock.com Email:sales@ebeestock.com

© 2022 Ebeestock Enterprises All Rights Reserved

SMA Female Field Replaceable Connector 2 Hole Flange Mount 0
.015 inch Pin, .355 inch Hole Spacing with Metal Contact Ring

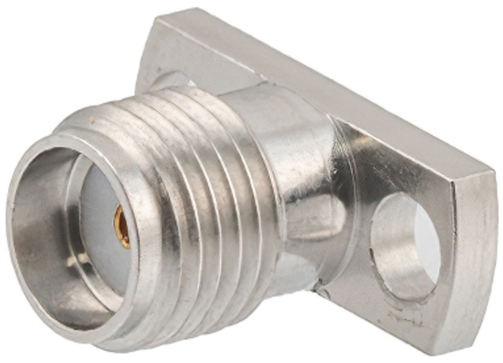

RF Connectors
Technical Data Sheet

ET11391

Material Specifications

Description	Material	Plating
Contact	Beryllium Copper	Gold
Insulation	PTFE	
Outer Conductor	Passivated Stainless Steel	
Body	Passivated Stainless Steel	

Environmental Specifications

Temperature

Operating Range -65 to +165 deg C

Compliance Certifications (see product page for current document)

Plotted and Other Data

Notes:

SMA Female Field Replaceable Connector 2 Hole Flange Mount 0.015 inch Pin, .355 inch Hole Spacing with Metal Contact Ring from Ebeestock Enterprises has same day shipment for domestic and International orders. Our RF, microwave and millimeter wave products maintain a 99.4% availability and are part of the broadest selection in the industry.

Click the following link (or enter part number in “SEARCH” on website) to obtain additional part information including price, inventory and certifications: SMA Female Field Replaceable Connector 2 Hole Flange Mount 0.015 inch Pin, .355 inch Hole Spacing with Metal Contact Ring ET11391

URL: https://www.ebeestock.com/sma-female-field-replaceable-connector-2-hole-flange-mount-0-015-inch-pin-355-inch-hole-spacing-with-metal-contact-ring-0011391

The information contained in this document is accurate to the best of our knowledge and representative of the part described herein. It may be necessary to make modifications to the part and/or the documentation of the part, in order to implement improvements. Ebeestock reserves the right to make such changes as required. Unless otherwise stated, all specifications are nominal. Ebeestock does not make any representation or warranty regarding the suitability of the part described herein for any particular purpose, and Ebeestock does not assume any liability arising out of the use of any part or documentation.

8th Floor, Building 1, Yongfu Science and Technology Center Industrial Park,
Nanzha District 5, Humen,523900, Dongguan, Guangdong, China.

Webstie:www.ebeestock.com Email:sales@ebeestock.com

© 2022 Ebeestock Enterprises All Rights Reserved

© 2022 Ebeestock Enterprises All Rights Reserved

www.ebeestock.com

REVISIONS			
REV.	DESCRIPTION	DATE	APPROVED
A	INITIAL RELEASE	3/31/2020	S.ELLIS

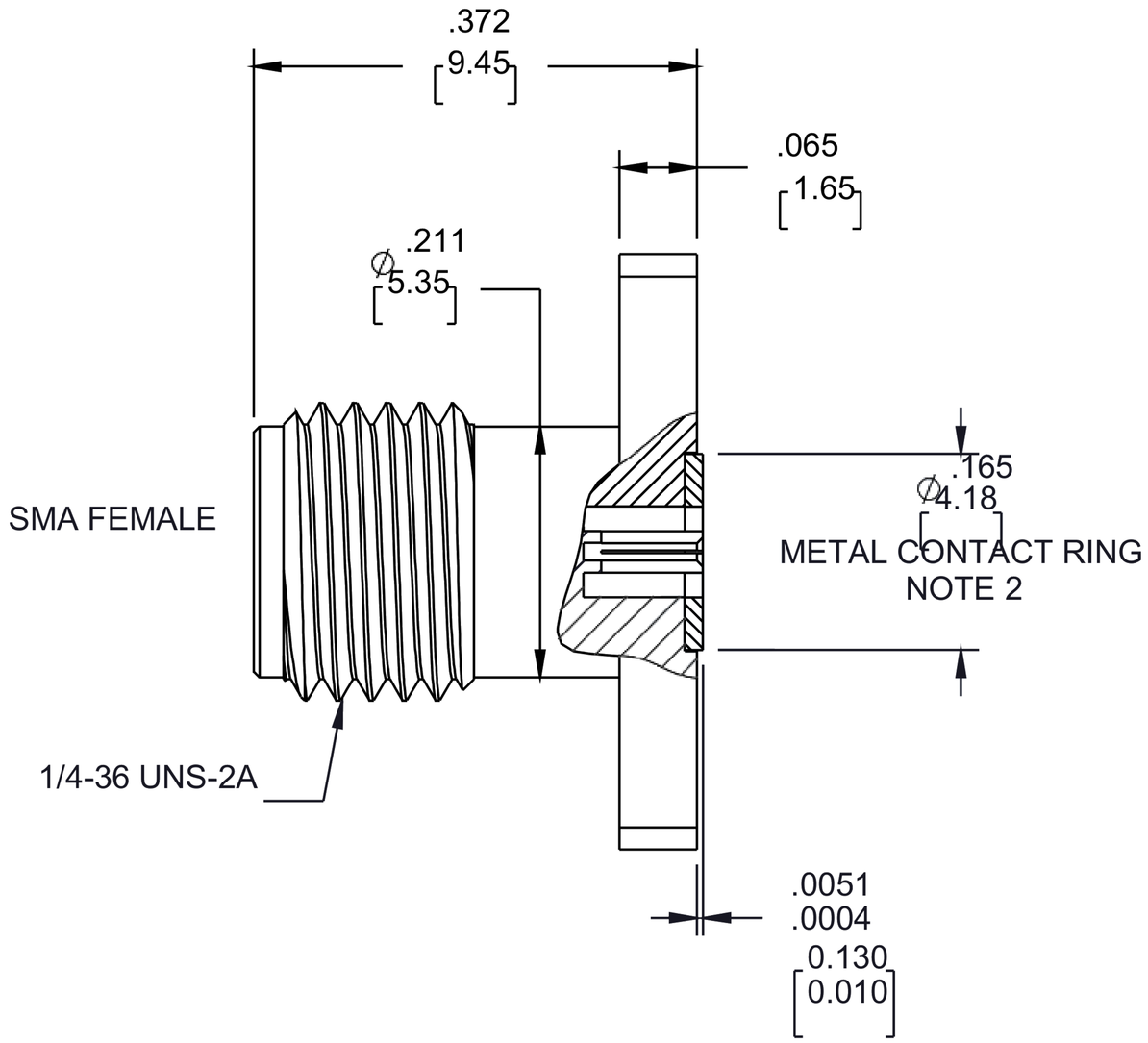

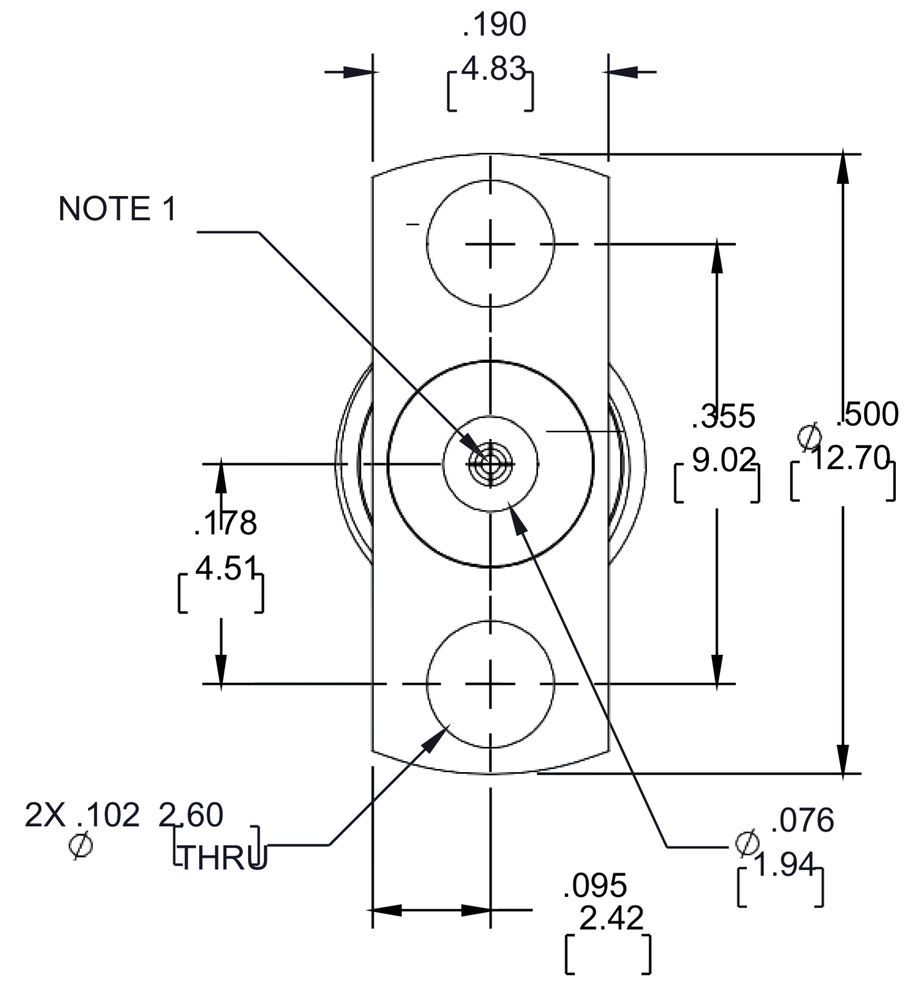

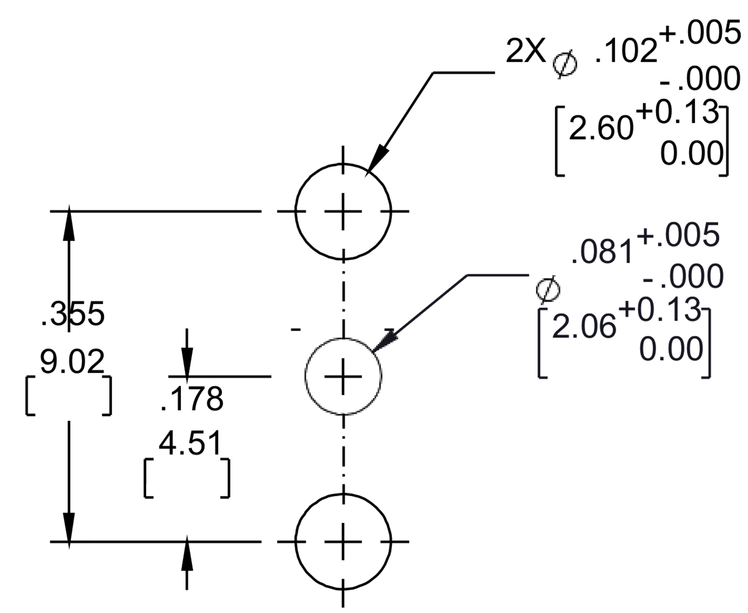

MOUNTING HOLES PATTERN

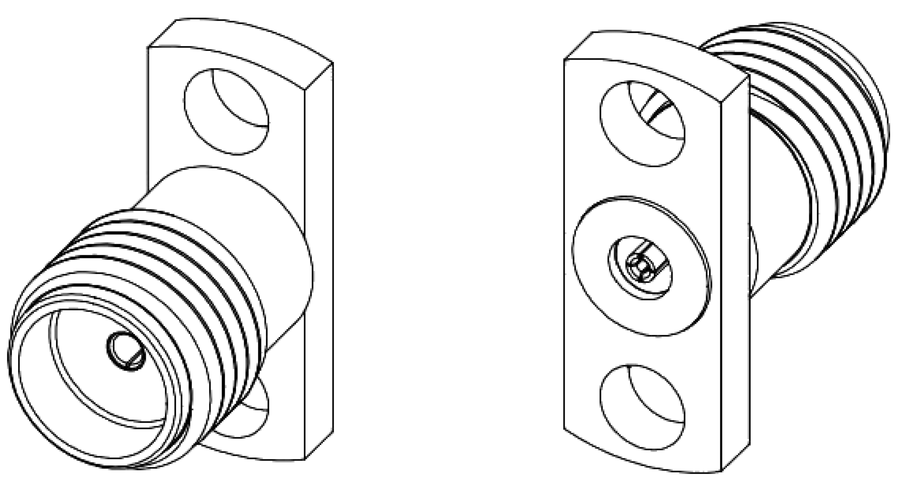

NOTES:

1. FEMALE CONTACT ACCEPTS PIN SIZE Ø .015 [0.38] ↧ .100 [2.55] MAX.
2. SEPARATE METAL CONTACT RING (PASSIVATED).

THESE COMMODITIES, TECHNOLOGY OR SOFTWARE WERE EXPORTED FROM THE UNITED STATES IN ACCORDANCE WITH THE EXPORT ADMINISTRATION REGULATIONS. DIVERSION CONTRARY TO U.S. LAW PROHIBITED.

UNLESS OTHERWISE SPECIFIED
LEADING DIMENSIONS ARE INCHES
DIMENSIONS IN [ ] ARE MILLIMETERS

TOLERANCES:

.X = ±.2 [5.08]
.XX = ± .02 [.51]
.XXX = ±.005 [.13]
FRACTIONS ± 1/32
ANGLES ± 1°

CABLE LENGTH (L) TOLERANCES:

L ≤ 12 [305] = +1 [25] / -0
12 [305] < L ≤ 60 [1524] = +2 [51] / -0
60 [1524] < L ≤ 120 [3048] = +4 [102] / -0
120 [3048] < L ≤ 300 [7620] = +6 [152] / -0
300 [7620] < L = +5%L / -0

ALL DIMENSIONS SHOWN ARE FOR REFERENCE ONLY.

PASTERNACK
ebeestock
Ebeestock.com
8th Floor, Building 1, Yongfu Science and Technology Center Industrial Park, Nanzha District 5, Humen,523900, Dongguan, Guangdong, China.
Webstie: www.ebeestock.com Email: sales@ebeestock.com
sales@ebeestock.com

THIRD-ANGLE PROJECTION

THE INFORMATION AND DESIGN IN THIS DOCUMENT IS THE PROPERTY OF Ebeestock CORPORATION ALL RIGHTS RESERVED.

SHEET	OF
1	1

SCALE N/A

SIZE	CAGE CODE	DRAWN BY	ITEM NO.	REV
A	53919	DZINN	ET11391	A

T-Rev.D