RP SMA Male Connector Crimp/Solder Attachment for ET-RG55, E T-ET-RG141, ET-ET-RG142, ET-RG223, ET-RG400

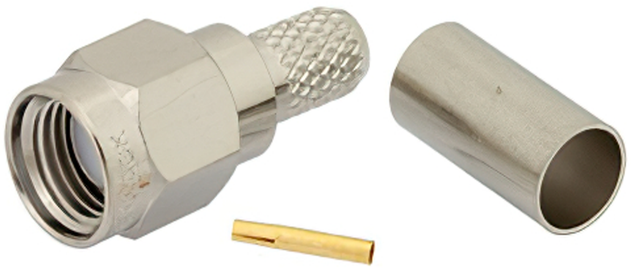

RF Connectors Technical Data Sheet ET11423

Configuration

- SMA Male Reverse Polarity Connector
- MIL-STD-348
- 50 Ohms
- Straight Body Geometry
- ET-RG55, ET-RG141, ET-RG142, ET-RG223, ET-RG400 Interface Type
- Crimp/Solder Attachment
- 5/16 inch Hex

Features

- Gold Plated Contact
- Contact plating according to MIL-G-45204
- Reverse Polarity

Applications

- General Purpose Test
- Custom Cable Assemblies

Description

Ebeestock's ET11423 RP SMA male connector with crimp/solder attachment for ET-RG55, ET-RG141, ET-RG142, ET-RG223 and ET-RG400 is part of our full line of RF components available for same-day shipping. The male reverse polarity configuration uses a male connector body with a female inner contact receptacle.

Our reverse polarity SMA male connector ET11423 datasheet specifications and drawing with dimensions are shown below in this PDF. Ebeestock's broad catalog of RF, microwave and millimeter wave connectors allows designers to configure and customize their signal connections however they like. Whether the need is to provide an I/O for a board design, or simply create a custom cable assembly configuration, Ebeestock has the right connector for the job. Ebeestock can also expertly build your custom cable assemblies for you and ship same-day.

Mechanical Specifications

Size	
Length	0.94 in [23.88 mm]
Width/Dia.	0.312 in [7.92 mm]
Weight	0.009 lbs [4.08 g]
Mating Torque	3 to 5 in-lbs [0.34 to 0.57 Nm]

Click the following link (or enter part number in "SEARCH" on website) to obtain additional part information including price, inventory and certifications: RP SMA Male Connector Crimp/Solder Attachment for ET-RG55, ET-RG141, ET-RG142, ET-RG223, ET-RG400 ET11423

8th Floor, Building 1, Yongfu Science and Technology Center Industrial Park,
Nanzha District 5, Humen,523900, Dongguan, Guangdong, China.

Webstie:www.ebeestock.com Email:sales@ebeestock.com

© 2022 Ebeestock Enterprises All Rights Reserved

RP SMA Male Connector Crimp/Solder Attachment for ET-RG55, ET-ET-RG141, ET-ET-RG142, ET-RG223, ET-RG400

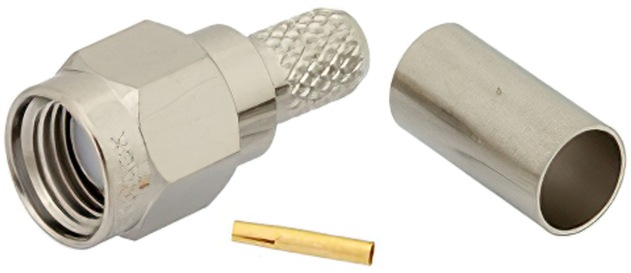

RF Connectors Technical Data Sheet ET11423

Material Specifications

Description	Material	Plating
Contact		Gold MIL-G-45204
Insulation	PTFE	
Body	Brass	Nickel QQ-N-290
Coupling Nut	Brass	Nickel QQ-N-290

Compliance Certifications (see product page for current document)

Plotted and Other Data

Notes:

RP SMA Male Connector Crimp/Solder Attachment for ET-RG55, ET-RG141, ET-RG142, ET-RG223, ET-RG400 from Ebeestock Enterprises has same day shipment for domestic and International orders. Our RF, microwave and millimeter wave products maintain a 99% availability and are part of the broadest selection in the industry.

Click the following link (or enter part number in “SEARCH” on website) to obtain additional part information including price, inventory and certifications: RP SMA Male Connector Crimp/Solder Attachment for ET-RG55, ET-RG141, ET-RG142, ET-RG223, ET-RG400 ET11423

URL: https://www.ebeestock.com/rp-sma-male-connector-crimp-solder-attachment-for-rg55-rg141-rg142-rg223-rg400-0011423

The information contained in this document is accurate to the best of our knowledge and representative of the part described herein. It may be necessary to make modifications to the part and/or the documentation of the part, in order to implement improvements. Ebeestock reserves the right to make such changes as required. Unless otherwise stated, all specifications are nominal. Ebeestock does not make any representation or warranty regarding the suitability of the part described herein for any particular purpose, and Ebeestock does not assume any liability arising out of the use of any part or documentation.

8th Floor, Building 1, Yongfu Science and Technology Center Industrial Park,
Nanzha District 5, Humen,523900, Dongguan, Guangdong, China.

Webstie:www.ebeestock.com Email:sales@ebeestock.com

© 2022 Ebeestock Enterprises All Rights Reserved

© 2022 Ebeestock Enterprises All Rights Reserved

www.ebeestock.com

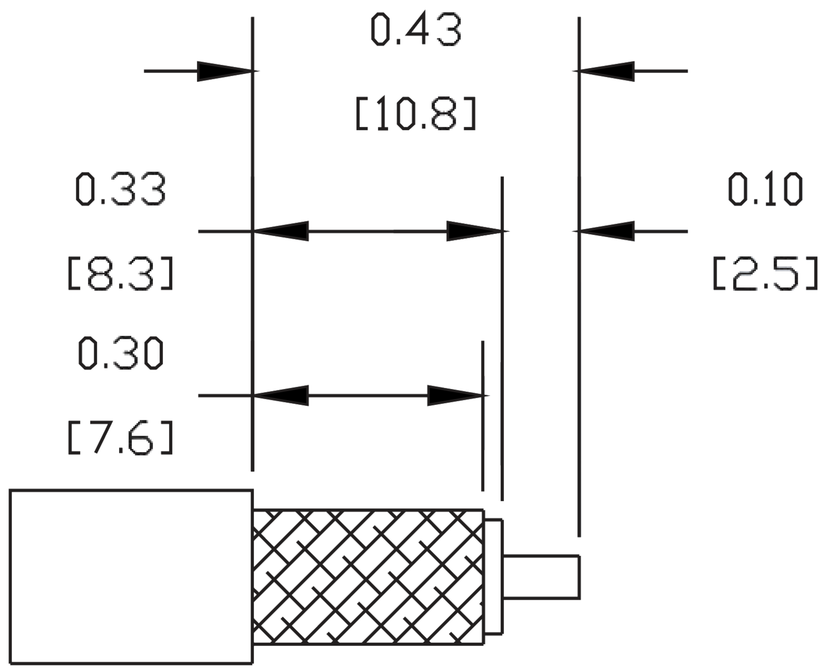

STRIPPING DIMENSIONS

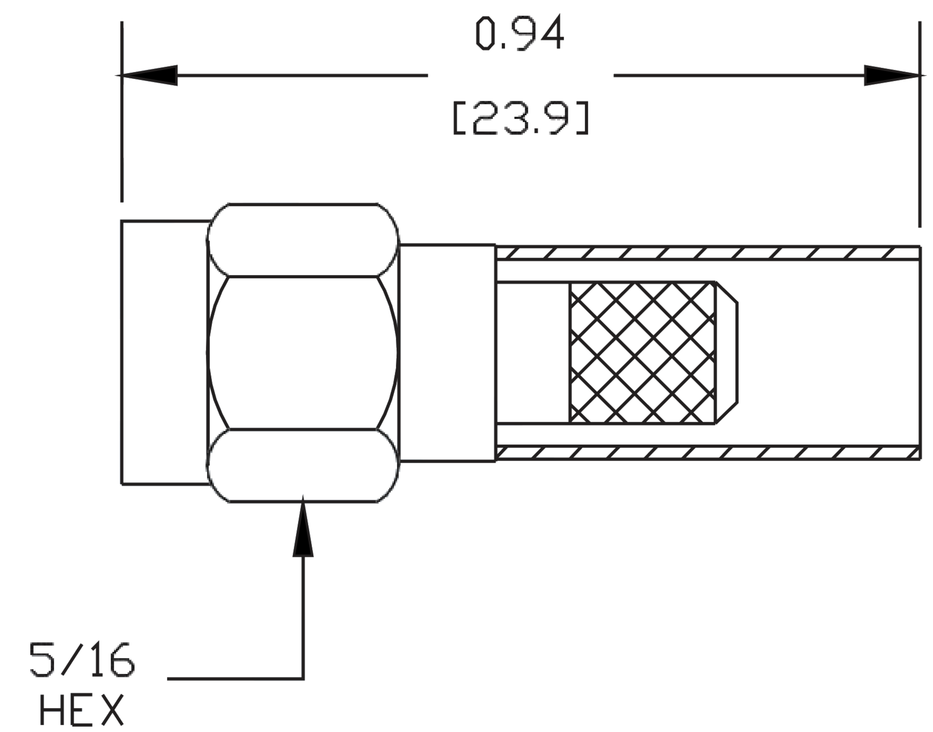

CRIMP SIZE REQUIRED

CONTACT: SOLDER
FERRULE: .213" HEX CRIMP TOOL

ebeestock
Ebeestock.com
8th Floor, Building 1, Yongfu Science
and Technology Center Industrial Park,
Nanzha District 5, Humen,523900, Dongguan, Guangdong, China.
Webstie: www.ebeestock.com **Email:** sales@ebeestock.com

DWG TITLE

ET11423

NOTES:
1. UNLESS OTHERWISE SPECIFIED ALL DIMENSIONS ARE NOMINAL.
2. ALL SPECIFICATIONS ARE SUBJECT TO CHANGE WITHOUT NOTICE AT ANY TIME.
3. DIMENSIONS ARE IN INCHES [mm].
4. FITS MIL-C-17 AND EQUIVALENT CABLES.

REV. -	FSCM NO. 53919	CAD FILE 060602	SCALE N/A	SIZE A	127