SMA Male Right Angle Connector Solder Attachment for PE-SR40 1AL, ET38326, ET-RG401

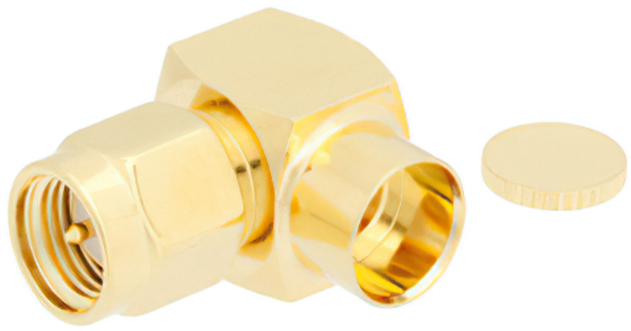

RF Connectors Technical Data Sheet ET11492

Configuration

- SMA Male Connector
- 50 Ohms
- Right Angle Body Geometry
- ET-SR401AL, ET38326, ET-RG401 Interface Type
- Solder/Solder Attachment
- 5/16 inch Hex

Features

- Max. Operating Frequency 12.4 GHz
- Gold Plated Brass Contact

Applications

- General Purpose Test
- Custom Cable Assemblies

Description

Ebeestock's ET11492 SMA male right angle connector with solder/solder attachment for ET-SR401AL, ET38326 and ET-RG401 is part of our full line of RF components available for same-day shipping. Our SMA male connector operates up to a maximum frequency of 12.4 GHz. Its right angle body geometry allows for easier connections in tight spaces.

Our SMA male right angle connector ET11492 datasheet specifications and drawing with dimensions are shown below in this PDF. Ebeestock's broad catalog of RF, microwave and millimeter wave connectors allows designers to configure and customize their signal connections however they like. Whether the need is to provide an I/O for a board design, or simply create a custom cable assembly configuration, Ebeestock has the right connector for the job. Ebeestock can also expertly build your custom cable assemblies for you and ship same-day.

Electrical Specifications

Description	Minimum	Typical	Maximum	Units
Frequency Range	DC		12.4	GHz

Mechanical Specifications

Size	
Length	0.71 in [18.03 mm]
Width/Dia.	0.378 in [9.60 mm]
Height	0.57 in [14.48 mm]
Weight	0.02 lbs [9.07 g]
Mating Torque	3 to 5 in-lbs [0.34 to 0.57 Nm]

Click the following link (or enter part number in "SEARCH" on website) to obtain additional part information including price, inventory and certifications: SMA Male Right Angle Connector Solder Attachment for ET-SR401AL, ET38326, ET-RG401 ET11492

8th Floor, Building 1, Yongfu Science and Technology Center Industrial Park,
Nanzha District 5, Humen,523900, Dongguan, Guangdong, China.

Webstie:www.ebeestock.com Email:sales@ebeestock.com

© 2022 Ebeestock Enterprises All Rights Reserved

SMA Male Right Angle Connector Solder Attachment for PE-SR40 1AL, ET38326, ET-RG401

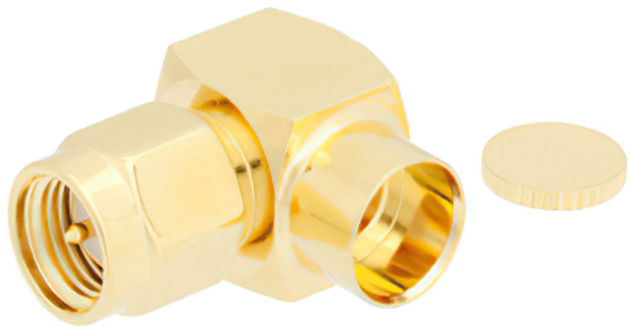

RF Connectors
Technical Data Sheet ET11492

Material Specifications

Description	Material	Plating
Contact	Brass	Gold
Insulation	PTFE	
Body	Brass	Gold
Coupling Nut	Brass	Gold

Environmental Specifications

Temperature

Operating Range -65 to +165 deg C

Compliance Certifications (see product page for current document)

Plotted and Other Data

Notes:

SMA Male Right Angle Connector Solder Attachment for ET-SR401AL, ET38326, ET-RG401 from Ebeestock Enterprises has same day shipment for domestic and International orders. Our RF, microwave and millimeter wave products maintain a 99.4% availability and are part of the broadest selection in the industry.

Click the following link (or enter part number in “SEARCH” on website) to obtain additional part information including price, inventory and certifications: SMA Male Right Angle Connector Solder Attachment for ET-SR401AL, ET38326, ET-RG401 ET11492

URL: https://www.ebeestock.com/sma-male-right-angle-connector-solder-attachment-for-pe-sr401al-pe-sr401fl-rg401-0011492

The information contained in this document is accurate to the best of our knowledge and representative of the part described herein. It may be necessary to make modifications to the part and/or the documentation of the part, in order to implement improvements. Ebeestock reserves the right to make such changes as required. Unless otherwise stated, all specifications are nominal. Ebeestock does not make any representation or warranty regarding the suitability of the part described herein for any particular purpose, and Ebeestock does not assume any liability arising out of the use of any part or documentation.

8th Floor, Building 1, Yongfu Science and Technology Center Industrial Park,
Nanzha District 5, Humen,523900, Dongguan, Guangdong, China.

Webstie:www.ebeestock.com Email:sales@ebeestock.com

© 2022 Ebeestock Enterprises All Rights Reserved

© 2022 Ebeestock Enterprises All Rights Reserved

www.ebeestock.com

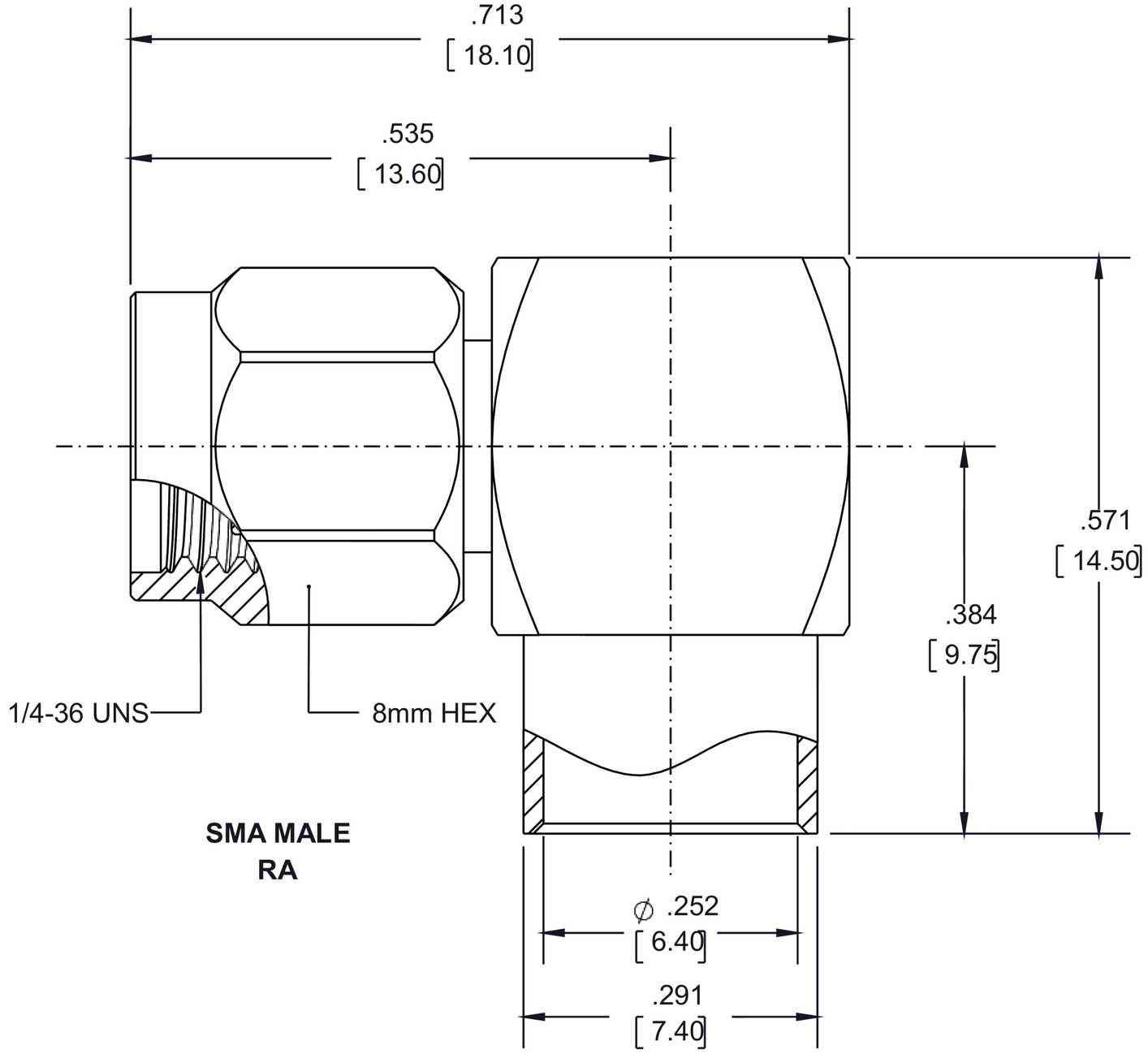

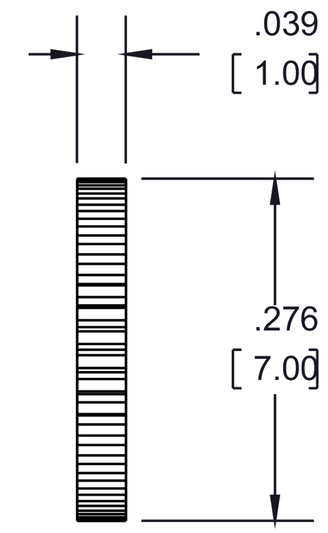

CAP

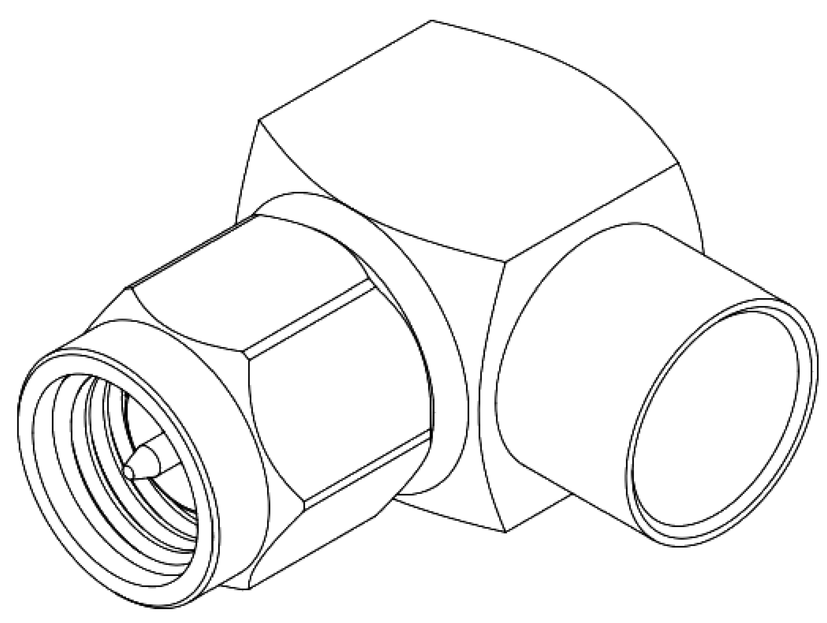

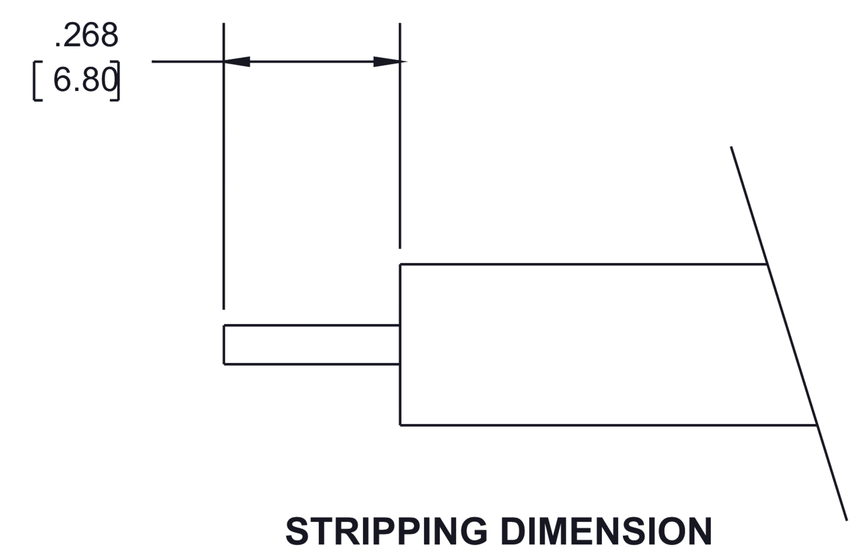

STRIPPING DIMENSION

CABLE ATTACHMENT:

- OUTER: SOLDER.
- INNER: SOLDER.

STANDARD TOLERANCES	
.X	±0.2
.XX	±0.01
.XXX	±0.005

*STANDARD TOLERANCES APPLY ONLY TO DIMENSIONS IN INCHES

ebeestock
Ebeestock.com
8th Floor, Building 1, Yongfu Science
and Technology Center Industrial Park,
Nanzha District 5, Humen,523900, Dongguan, Guangdong, China.
Webstie: www.ebeestock.com **Email:** sales@ebeestock.com

DWG TITLE

ET4923

NOTES:
1. UNLESS OTHERWISE SPECIFIED ALL DIMENSIONS ARE NOMINAL.
2. ALL SPECIFICATIONS ARE SUBJECT TO CHANGE WITHOUT NOTICE AT ANY TIME.
3. DIMENSIONS ARE IN INCHES [mm].

CAGE CODE 53919	CAD FILE 11/07/18	SCALE N/A	SIZE A	7361

© 2022 Ebeestock Enterprises All Rights Reserved