SMA Male Right Angle Low PIM Connector Solder Attachment for ET38402, ET38402-LF

RF Connectors Technical Data Sheet

TIMES MICROWAVE SYSTEMS

ET11498

Times Microwave Systems Connector Specification

Configuration

- SMA Male Connector
- 50 Ohms
- Right Angle Body Geometry
- Connector Interface Types: ET38402, ET38400
- Low PIM Design

Features

- Max. Operating Frequency 6 GHz
- Good VSWR of 1.3:1
- Silver Plated Brass Contact
- 5 µm contact plating

Applications

- General Purpose Test
- Wireless Communications
- Custom Cable Assemblies
- Low PIM Applications
- Distributed Antenna Systems (DAS)

Description

Ebeestock's ET11498 SMA male right angle connector with solder/solder attachment for ET38402 and ET38400 is part of our full line of RF components available for same-day shipping. Our SMA male connector operates up to a maximum frequency of 6 GHz and offers good VSWR of 1.3:1. Its right angle body geometry allows for easier connections in tight spaces.

Our SMA male right angle connector ET11498 datasheet specifications and drawing with dimensions are shown below in this PDF. Ebeestock's broad catalog of RF, microwave and millimeter wave connectors allows designers to configure and customize their signal connections however they like. Whether the need is to provide an I/O for a board design, or simply create a custom cable assembly configuration, Ebeestock has the right connector for the job. Ebeestock can also expertly build your custom cable assemblies for you and ship same-day.

Electrical Specifications

Description	Minimum	Typical	Maximum	Units
Frequency Range	DC		6	GHz
VSWR			1.3:1	
Insertion Loss			0.15	dB
Operating Voltage (DC)			1,000	Vdc
Inner Conductor DC Resistance			3	mOhms
Outer Conductor DC Resistance			2.5	mOhms
Insulation Resistance	5,000			MOhms

Electrical Specification Notes:
Insertion Loss is 0.1*sqrt(FGHz)

Click the following link (or enter part number in "SEARCH" on website) to obtain additional part information including price, inventory and certifications: SMA Male Right Angle Low PIM Connector Solder Attachment for ET38402, ET38400 TC-402-SM-RA-LP

8th Floor, Building 1, Yongfu Science and Technology Center Industrial Park,
Nanzha District 5, Humen,523900, Dongguan, Guangdong, China.

Webstie:www.ebeestock.com Email:sales@ebeestock.com

© 2022 Ebeestock Enterprises All Rights Reserved

SMA Male Right Angle Low PIM Connector Solder Attachment for ET38402, ET38402-LF

RF Connectors
Technical Data Sheet

TIMES MICROWAVE SYSTEMS

ET11498

Mechanical Specifications

Size

Length	0.807 in [20.5 mm]
Width/Dia.	0.37 in [9.40 mm]
Mating Torque	9.73 in-lbs [1.10 Nm]

Material Specifications

Description	Material	Plating
Contact	Brass	Silver 5 µm
Insulation	PTFE	
Body	Brass	Tri-Metal 3 µm
Coupling Nut	Brass	Tri-Metal 3 µm
Gasket	Silicone Rubber	

Environmental Specifications

Temperature

Operating Range	-55 to +155 deg C
Shock	US MIL-STD 202, Meth. 213, Cond. I
Vibration	US MIL-STD 202, Meth. 204, Cond. B
Thermal Shock	US MIL-STD 202, Meth. 107, Cond. B

Environmental Specification Notes:
Weather Standard: TEC 60068 55/155/21

Compliance Certifications (see product page for current document)

Plotted and Other Data

Notes:

Click the following link (or enter part number in “SEARCH” on website) to obtain additional part information including price, inventory and certifications: SMA Male Right Angle Low PIM Connector Solder Attachment for ET38402, ET38400 TC-402-SM-RA-LP

8th Floor, Building 1, Yongfu Science and Technology Center Industrial Park,
Nanzha District 5, Humen,523900, Dongguan, Guangdong, China.

Webstie:www.ebeestock.com Email:sales@ebeestock.com

© 2022 Ebeestock Enterprises All Rights Reserved

SMA Male Right Angle Low PIM Connector Solder Attachment for ET38402, ET38402-LF

RF Connectors
Technical Data Sheet

TIMES MICROWAVE SYSTEMS

ET11498

SMA Male Right Angle Low PIM Connector Solder Attachment for ET38402, ET38400 from Ebeestock Enterprises has same day shipment for domestic and International orders. Our RF, microwave and millimeter wave products maintain a 99.4% availability and are part of the broadest selection in the industry.

Click the following link (or enter part number in “SEARCH” on website) to obtain additional part information including price, inventory and certifications: SMA Male Right Angle Low PIM Connector Solder Attachment for ET38402, ET38400 TC-402-SM-RA-LP

URL: https://www.ebeestock.com/sma-male-right-angle-low-pim-connector-solder-attachment-for-tft-402-tft-402-lf-0011498

The information contained in this document is accurate to the best of our knowledge and representative of the part described herein. It may be necessary to make modifications to the part and/or the documentation of the part, in order to implement improvements. Ebeestock reserves the right to make such changes as required. Unless otherwise stated, all specifications are nominal. Ebeestock does not make any representation or warranty regarding the suitability of the part described herein for any particular purpose, and Ebeestock does not assume any liability arising out of the use of any part or documentation.

8th Floor, Building 1, Yongfu Science and Technology Center Industrial Park,
Nanzha District 5, Humen,523900, Dongguan, Guangdong, China.

Webstie:www.ebeestock.com Email:sales@ebeestock.com

© 2022 Ebeestock Enterprises All Rights Reserved

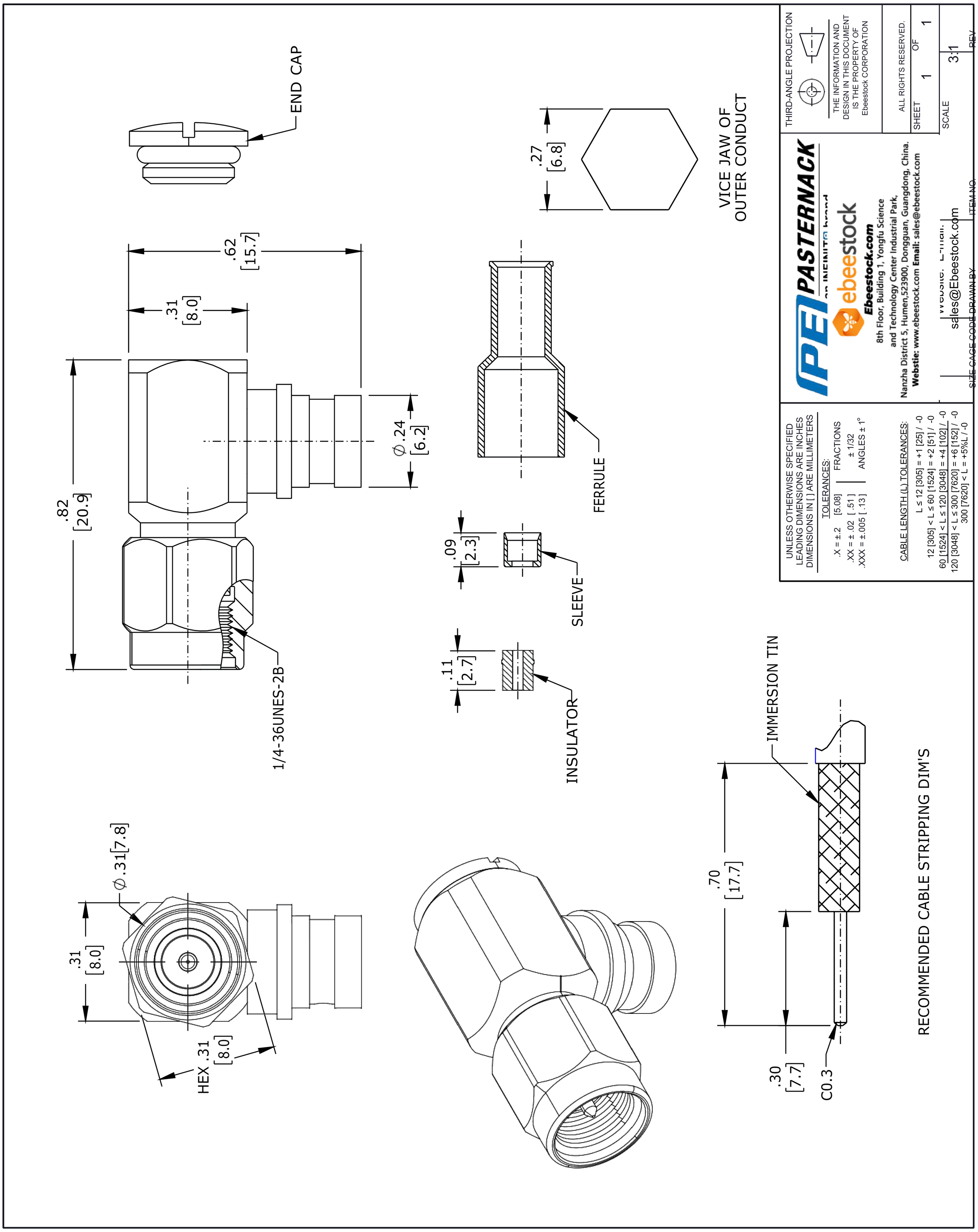

© 2022 Ebeestock Enterprises All Rights Reserved

ALL DIMENSIONS SHOWN ARE FOR REFERENCE ONLY.

A 53919 DMAY ET11498

© 2022 Ebeestock Enterprises All Rights Reserved