SMP Male Full Detent Connector Solder Attachment Thru Hole P

CB, Up To 8 GHz

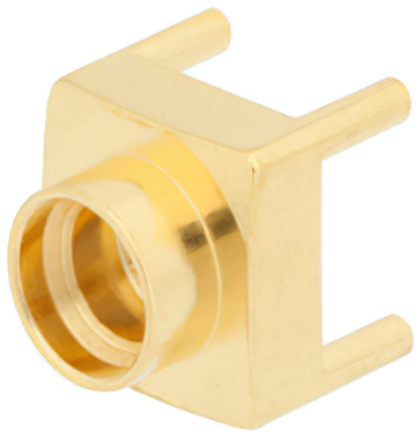

RF Connectors Technical Data Sheet

ET11517

Configuration

- Full Detent SMP Male Connector
- MIL-STD-348A
- 50 Ohms
- Straight Body Geometry
- Thru Hole Interface Type
- Solder Attachment

Features

- Max. Operating Frequency 8 GHz
- Excellent VSWR of 1.1:1
- Gold Plated Beryllium Copper Contact
- Blind Mate Connector

Applications

- General Purpose Test
- PCB Applications

Description

Ebeestock's ET11517 SMP male full detent connector with solder attachment for thru hole PCB is part of our full line of RF components available for same-day shipping. Our SMP male connector operates up to a maximum frequency of 8 GHz and offers excellent VSWR of 1.1:1. The Ebeestock blind mate connector is ideal for applications where direct visual or tactile access to the connection point is not possible, for example, when two circuit boards need to be mated.

Our SMP male connector ET11517 datasheet specifications and drawing with dimensions are shown below in this PDF. Ebeestock's broad catalog of RF, microwave and millimeter wave connectors allows designers to configure and customize their signal connections however they like. Whether the need is to provide an I/O for a board design, or simply create a custom cable assembly configuration, Ebeestock has the right connector for the job. Ebeestock can also expertly build your custom cable assemblies for you and ship same-day.

Electrical Specifications

Description	Minimum	Typical	Maximum	Units
Frequency Range	DC		8	GHz
VSWR			1.1:1	
Operating Voltage (AC)			335	Vrms
Dielectric Withstanding Voltage (AC)			500	Vrms
Inner Conductor DC Resistance			6	mOhms
Outer Conductor DC Resistance			2	mOhms
Insulation Resistance	5,000			MOhms

Electrical Specification Notes:
Insertion loss = 0.13 x sqrt(fGHz) dB max.

Click the following link (or enter part number in "SEARCH" on website) to obtain additional part information including price, inventory and certifications: SMP Male Full Detent Connector Solder Attachment Thru Hole PCB, Up To 8 GHz ET11517

8th Floor, Building 1, Yongfu Science and Technology Center Industrial Park,
Nanzha District 5, Humen,523900, Dongguan, Guangdong, China.

Webstie:www.ebeestock.com Email:sales@ebeestock.com

© 2022 Ebeestock Enterprises All Rights Reserved

SMP Male Full Detent Connector Solder Attachment Thru Hole P

CB, Up To 8 GHz

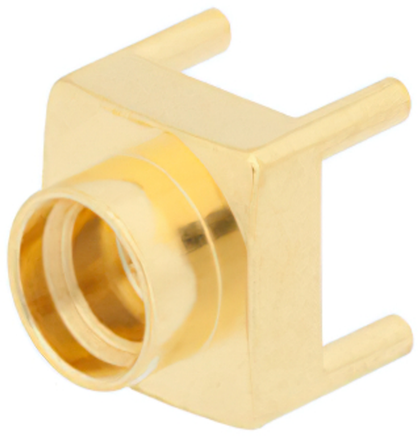

RF Connectors Technical Data Sheet

ET11517

Mechanical Specifications

Size

Length	0.279 in [7.09 mm]
Width/Dia.	0.236 in [5.99 mm]
Height	0.236 in [5.99 mm]
Weight	0.003 lbs [1.36 g]
Mating Cycles	100 Cycles

Material Specifications

Description	Material	Plating
Contact	Beryllium Copper	Gold
Insulation	PTFE	
Body	Brass	Gold

Environmental Specifications

Temperature

Operating Range	-65 to +165 deg C

Compliance Certifications (see product page for current document)

Plotted and Other Data

Notes:

SMP Male Full Detent Connector Solder Attachment Thru Hole PCB, Up To 8 GHz from Ebeestock Enterprises has same day shipment for domestic and International orders. Our RF, microwave and millimeter wave products maintain a 99% availability and are part of the broadest selection in the industry.

Click the following link (or enter part number in “SEARCH” on website) to obtain additional part information including price, inventory and certifications: SMP Male Full Detent Connector Solder Attachment Thru Hole PCB, Up To 8 GHz ET11517

URL: https://www.ebeestock.com/smp-male-full-detent-connector-solder-attachment-thru-hole-pcb-up-to-8-ghz-0011517

The information contained in this document is accurate to the best of our knowledge and representative of the part described herein. It may be necessary to make modifications to the part and/or the documentation of the part, in order to implement improvements. Ebeestock reserves the right to make such changes as required. Unless otherwise stated, all specifications are nominal. Ebeestock does not make any representation or warranty regarding the suitability of the part described herein for any particular purpose, and Ebeestock does not assume any liability arising out of the use of any part or documentation.

8th Floor, Building 1, Yongfu Science and Technology Center Industrial Park,
Nanzha District 5, Humen,523900, Dongguan, Guangdong, China.

Webstie:www.ebeestock.com Email:sales@ebeestock.com

© 2022 Ebeestock Enterprises All Rights Reserved

ET11517 CAD Drawing

SMP Male Full Detent Connector Solder Attachment Thru Hole PCB, Up To 8 GHz

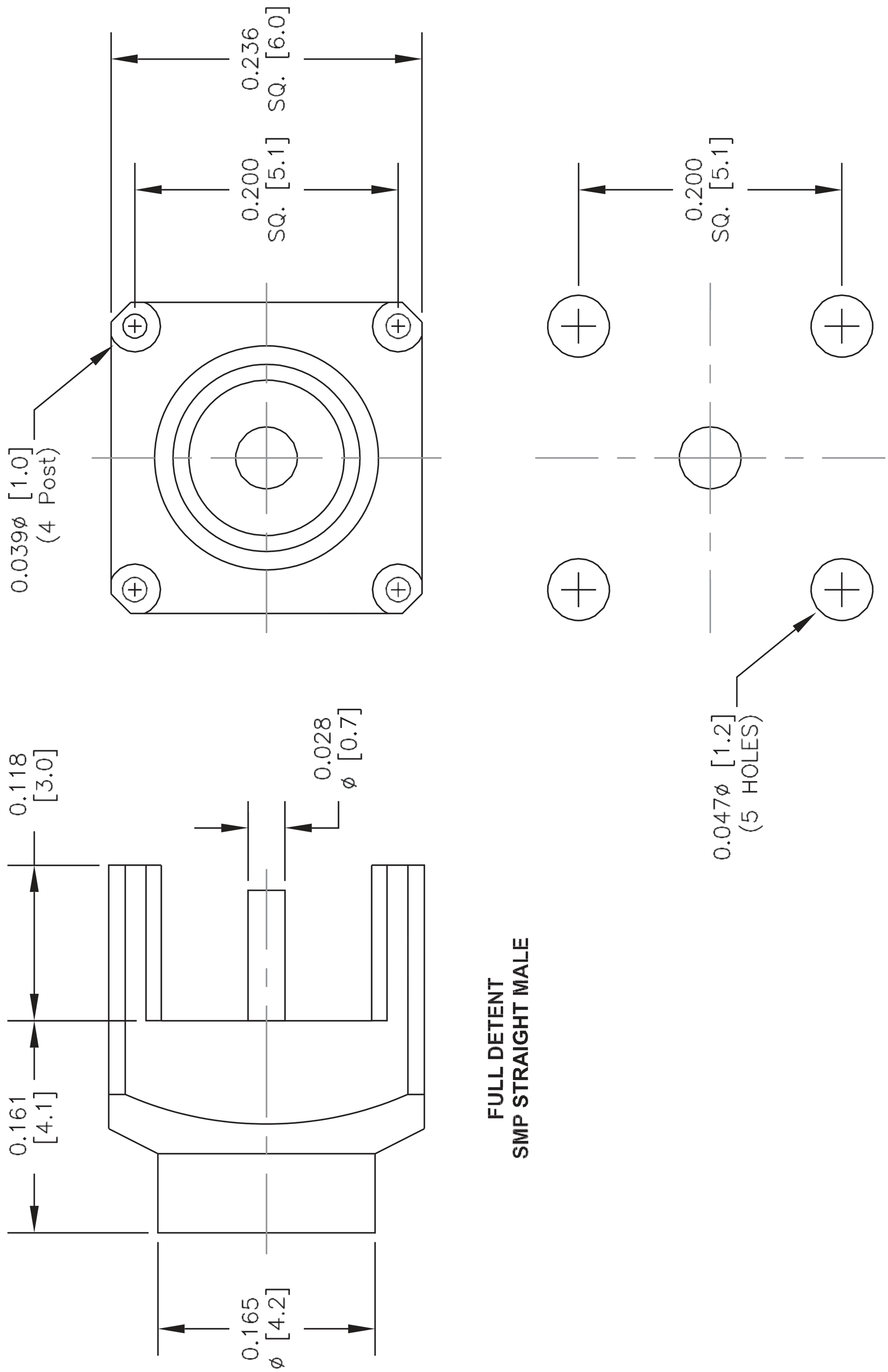

NOTE: ALL TOLERANCES ARE ± 0.005 [.127] UNLESS OTHERWISE SPECIFIED.

NOTES:
1. UNLESS OTHERWISE SPECIFIED ALL DIMENSIONS ARE NOMINAL.
2. ALL SPECIFICATIONS ARE SUBJECT TO CHANGE WITHOUT NOTICE AT ANY TIME.
3. DIMENSIONS ARE IN INCHES [mm].
4. FITS MIL-C-17 AND EQUIVALENT CABLES.

DWG TITLE: ET11517

CAD FILE: 021314

SCALE: N/A

SIZE: A

2233

FSCM NO. 53919

ebeestock
Ebeestock.com
8th Floor, Building 1, Yongfu Science and Technology Center Industrial Park,
Nanzha District 5, Humen,523900, Dongguan, Guangdong, China.
Webstie: www.ebeestock.com Email: sales@ebeestock.com

© 2022 Ebeestock Enterprises All Rights Reserved