SMP Male Limited Detent Connector Solder Attachment Thread-In Mount Pin Terminal, .065 inch Pin Length

RF Connectors
Technical Data Sheet

ET11523

Configuration

- Limited Detent SMP Male Connector
- MIL-STD-348
- 50 Ohms
- Straight Body Geometry
- Connector Interface Types: Pin
- Thread-In

Features

- Max. Operating Frequency 50 GHz
- Good VSWR of 1.3:1
- Gold Plated Beryllium Copper Contact
- Contact plating according to MIL-G-45204
- Blind Mate Connector

Applications

- General Purpose Test

Description

Ebeestock's ET11523 SMP male limited detent thread-in mount connector with solder attachment Pin terminal is part of our full line of RF components available for same-day shipping. Our SMP male connector operates up to a maximum frequency of 50 GHz and offers good VSWR of 1.3:1. The Ebeestock blind mate connector is ideal for applications where direct visual or tactile access to the connection point is not possible, for example, when two circuit boards need to be mated.

Our SMP male thread-in connector ET11523 datasheet specifications and drawing with dimensions are shown below in this PDF. Ebeestock's broad catalog of RF, microwave and millimeter wave connectors allows designers to configure and customize their signal connections however they like. Whether the need is to provide an I/O for a board design, or simply create a custom cable assembly configuration, Ebeestock has the right connector for the job. Ebeestock can also expertly build your custom cable assemblies for you and ship same-day.

Electrical Specifications

Description	Minimum	Typical	Maximum	Units
Frequency Range	DC		50	GHz
VSWR			1.3:1	

Mechanical Specifications

Size	
Length	0.295 in [7.49 mm]
Width/Dia.	0.189 in [4.80 mm]
Weight	0.002 lbs [0.91 g]

Click the following link (or enter part number in "SEARCH" on website) to obtain additional part information including price, inventory and certifications: SMP Male Limited Detent Connector Solder Attachment Thread-In Mount Pin Terminal, .065 inch Pin Length ET11523

8th Floor, Building 1, Yongfu Science and Technology Center Industrial Park,
Nanzha District 5, Humen,523900, Dongguan, Guangdong, China.

Webstie:www.ebeestock.com Email:sales@ebeestock.com

© 2022 Ebeestock Enterprises All Rights Reserved

SMP Male Limited Detent Connector Solder Attachment Thread-In Mount Pin Terminal, .065 inch Pin Length

RF Connectors
Technical Data Sheet

ET11523

Material Specifications

Description	Material	Plating
Contact	Beryllium Copper	Gold MIL-G-45204
Insulation	PTFE	
Body	Passivated Stainless Steel	QQ-P-35

Environmental Specifications

Temperature

Operating Range -65 to +165 deg C

Compliance Certifications (see product page for current document)

Plotted and Other Data

Notes:

SMP Male Limited Detent Connector Solder Attachment Thread-In Mount Pin Terminal, .065 inch Pin Length from Ebeestock Enterprises has same day shipment for domestic and International orders. Our RF, microwave and millimeter wave products maintain a 99.4% availability and are part of the broadest selection in the industry.

Click the following link (or enter part number in “SEARCH” on website) to obtain additional part information including price, inventory and certifications: SMP Male Limited Detent Connector Solder Attachment Thread-In Mount Pin Terminal, .065 inch Pin Length ET11523

URL: https://www.ebeestock.com/smp-male-limited-detent-connector-solder-attachment-thread-in-mount-pin-terminal-065-inch-pin-length-0011523

The information contained in this document is accurate to the best of our knowledge and representative of the part described herein. It may be necessary to make modifications to the part and/or the documentation of the part, in order to implement improvements. Ebeestock reserves the right to make such changes as required. Unless otherwise stated, all specifications are nominal. Ebeestock does not make any representation or warranty regarding the suitability of the part described herein for any particular purpose, and Ebeestock does not assume any liability arising out of the use of any part or documentation.

8th Floor, Building 1, Yongfu Science and Technology Center Industrial Park,
Nanzha District 5, Humen,523900, Dongguan, Guangdong, China.

Webstie:www.ebeestock.com Email:sales@ebeestock.com

© 2022 Ebeestock Enterprises All Rights Reserved

© 2022 Ebeestock Enterprises All Rights Reserved

www.ebeestock.com

REVISIONS			
REV.	DESCRIPTION	DATE	APPROVED
A	INITIAL RELEASE	10/14/19	S.ELLIS

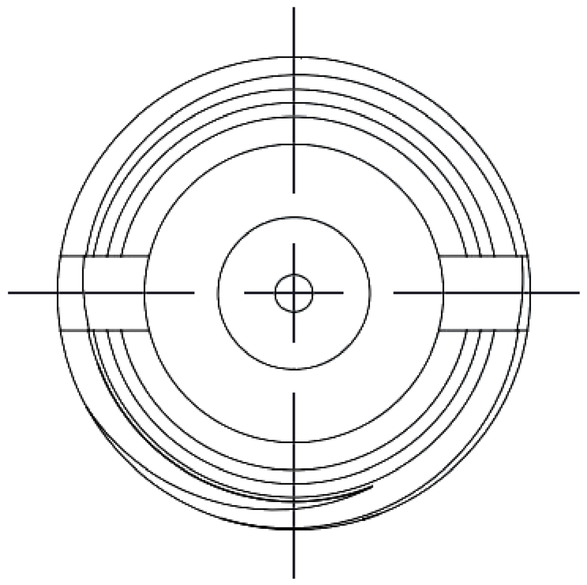

SMP MALE
LIMITED DETENT

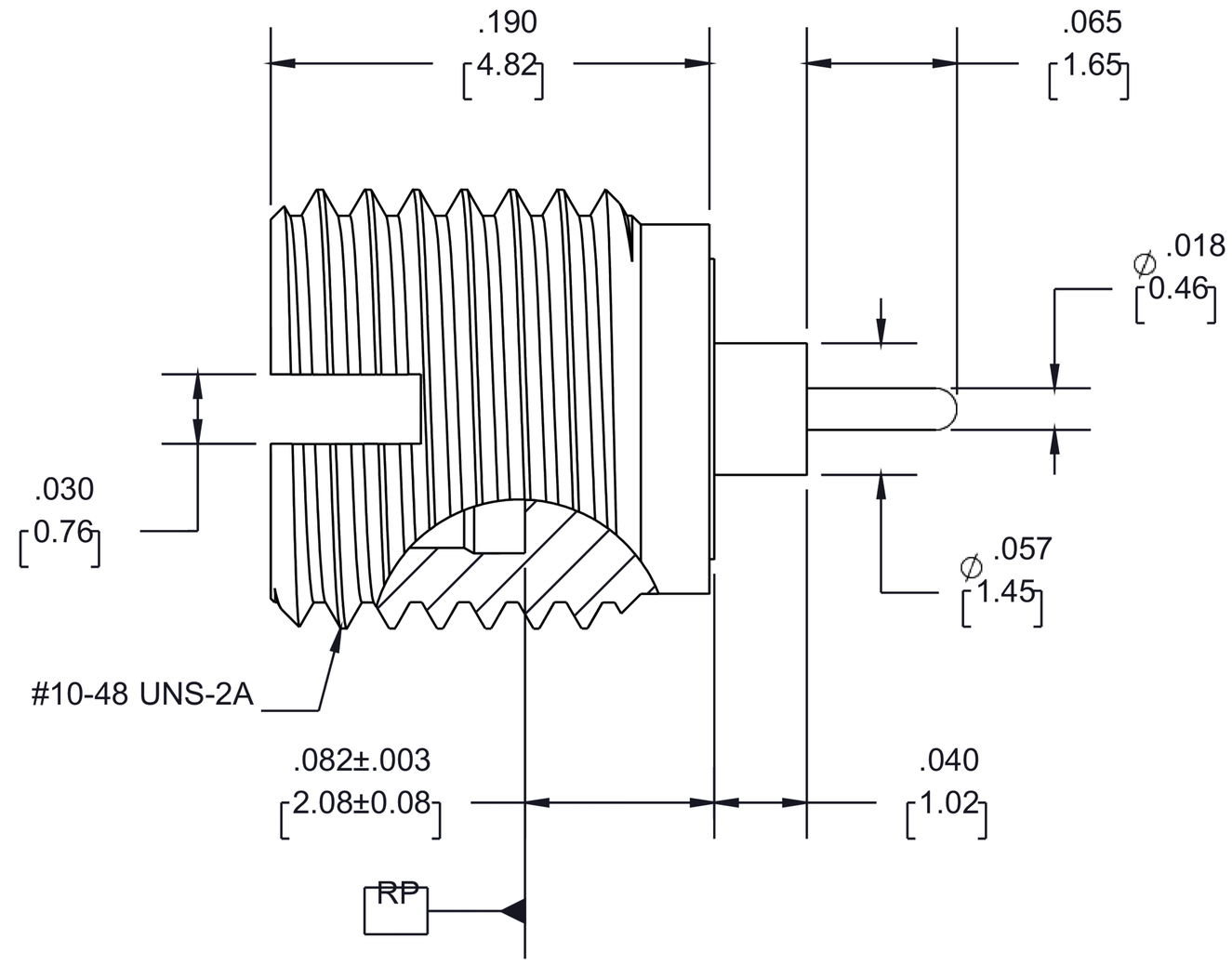

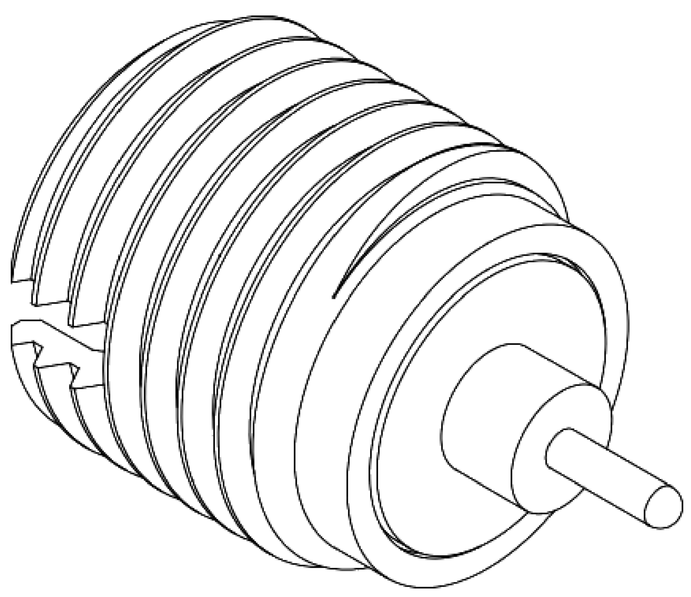

THESE COMMODITIES, TECHNOLOGY OR SOFTWARE WERE EXPORTED FROM THE UNITED STATES IN ACCORDANCE WITH THE EXPORT ADMINISTRATION REGULATIONS. DIVERSION CONTRARY TO U.S. LAW PROHIBITED.

UNLESS OTHERWISE SPECIFIED
LEADING DIMENSIONS ARE INCHES
DIMENSIONS IN [ ] ARE MILLIMETERS

TOLERANCES:

.X=± .2	[5.08]	FRACTIONS
.XX=± .01	[.25]	± 1/32
.XXX=± .005	[.13]	ANGLES ± 1°

ALL DIMENSIONS SHOWN
ARE FOR REFERENCE ONLY.

THIRD-ANGLE PROJECTION

ebeestock
Ebeestock.com
8th Floor, Building 1, Yongfu Science
and Technology Center Industrial Park,
Nanzha District 5, Humen,523900, Dongguan, Guangdong, China.
Webstie: www.ebeestock.com **Email:** sales@ebeestock.com
e-mail: sales@Ebeestock.com

THE INFORMATION AND DESIGN IN THIS DOCUMENT IS THE PROPERTY OF Ebeestock CORPORATION. ALL RIGHTS RESERVED.

SHEET 1 OF 1

SCALE N/A

SIZE	CAGE CODE	DRAWN BY	PART NUMBER	REV
A	53919	K.DANG	ET11523	A

T-Rev.B