SMP Male Full Detent Connector Solder Attachment Edge Launch PCB

RF Connectors Technical Data Sheet

ET11567

Configuration

- Full Detent SMP Male Connector
- MIL-STD-348
- 50 Ohms
- Straight Body Geometry
- Edge Launch Interface Type
- Solder Attachment

Features

- Max. Operating Frequency 40 GHz
- Gold Plated Beryllium Copper Contact
- Contact plating according to MIL-G-45204
- Blind Mate Connector

Applications

- General Purpose Test
- PCB Applications

Description

Ebeestock's ET11567 SMP male full detent connector with solder attachment for edge launch PCB is part of our full line of RF components available for same-day shipping. Our SMP male connector operates up to a maximum frequency of 40 GHz. The Ebeestock blind mate connector is ideal for applications where direct visual or tactile access to the connection point is not possible, for example, when two circuit boards need to be mated.

Our SMP male connector ET11567 datasheet specifications and drawing with dimensions are shown below in this PDF. Ebeestock's broad catalog of RF, microwave and millimeter wave connectors allows designers to configure and customize their signal connections however they like. Whether the need is to provide an I/O for a board design, or simply create a custom cable assembly configuration, Ebeestock has the right connector for the job. Ebeestock can also expertly build your custom cable assemblies for you and ship same-day.

Electrical Specifications

Description	Minimum	Typical	Maximum	Units
Frequency Range	DC		40	GHz

Mechanical Specifications

Size	
Length	0.307 in [7.8 mm]
Width/Dia.	0.25 in [6.35 mm]
Weight	0.001 lbs [0.45 g]

Click the following link (or enter part number in "SEARCH" on website) to obtain additional part information including price, inventory and certifications: SMP Male Full Detent Connector Solder Attachment Edge Launch PCB ET11567

8th Floor, Building 1, Yongfu Science and Technology Center Industrial Park,
Nanzha District 5, Humen,523900, Dongguan, Guangdong, China.

Webstie:www.ebeestock.com Email:sales@ebeestock.com

© 2022 Ebeestock Enterprises All Rights Reserved

SMP Male Full Detent Connector Solder Attachment Edge Launch PCB

RF Connectors
Technical Data Sheet

ET11567

Material Specifications

Description	Material	Plating
Contact	Beryllium Copper	Gold MIL-G-45204
Insulation	PTFE	
Body	Beryllium Copper	Gold MIL-G-45204

Environmental Specifications

Temperature

Operating Range -55 to +155 deg C

Compliance Certifications (see product page for current document)

Plotted and Other Data

Notes:

Assembly Instruction

SMP Male Full Detent Connector Solder Attachment Edge Launch PCB from Ebeestock Enterprises has same day shipment for domestic and International orders. Our RF, microwave and millimeter wave products maintain a 99.4% availability and are part of the broadest selection in the industry.

Click the following link (or enter part number in “SEARCH” on website) to obtain additional part information including price, inventory and certifications: SMP Male Full Detent Connector Solder Attachment Edge Launch PCB ET11567

URL: https://www.ebeestock.com/smp-male-full-detent-connector-solder-attachment-edge-launch-pcb-0011567

The information contained in this document is accurate to the best of our knowledge and representative of the part described herein. It may be necessary to make modifications to the part and/or the documentation of the part, in order to implement improvements. Ebeestock reserves the right to make such changes as required. Unless otherwise stated, all specifications are nominal. Ebeestock does not make any representation or warranty regarding the suitability of the part described herein for any particular purpose, and Ebeestock does not assume any liability arising out of the use of any part or documentation.

8th Floor, Building 1, Yongfu Science and Technology Center Industrial Park,
Nanzha District 5, Humen,523900, Dongguan, Guangdong, China.

Webstie:www.ebeestock.com Email:sales@ebeestock.com

© 2022 Ebeestock Enterprises All Rights Reserved

© 2022 Ebeestock Enterprises All Rights Reserved

www.ebeestock.com

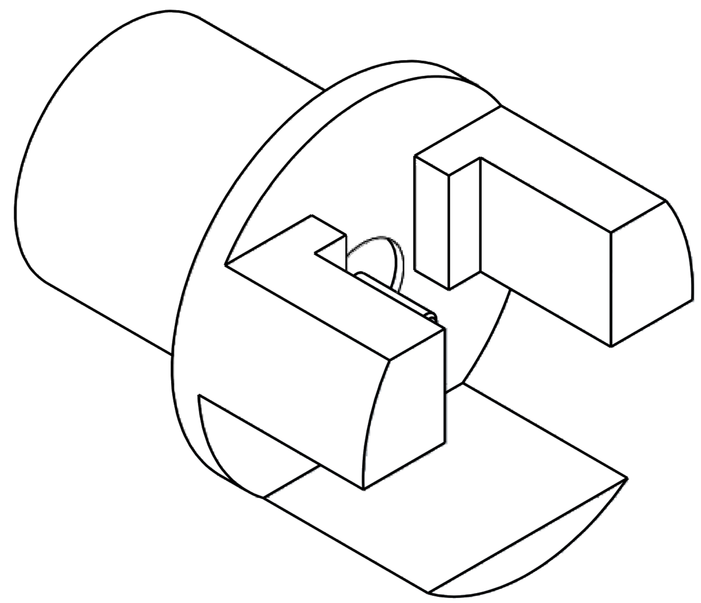

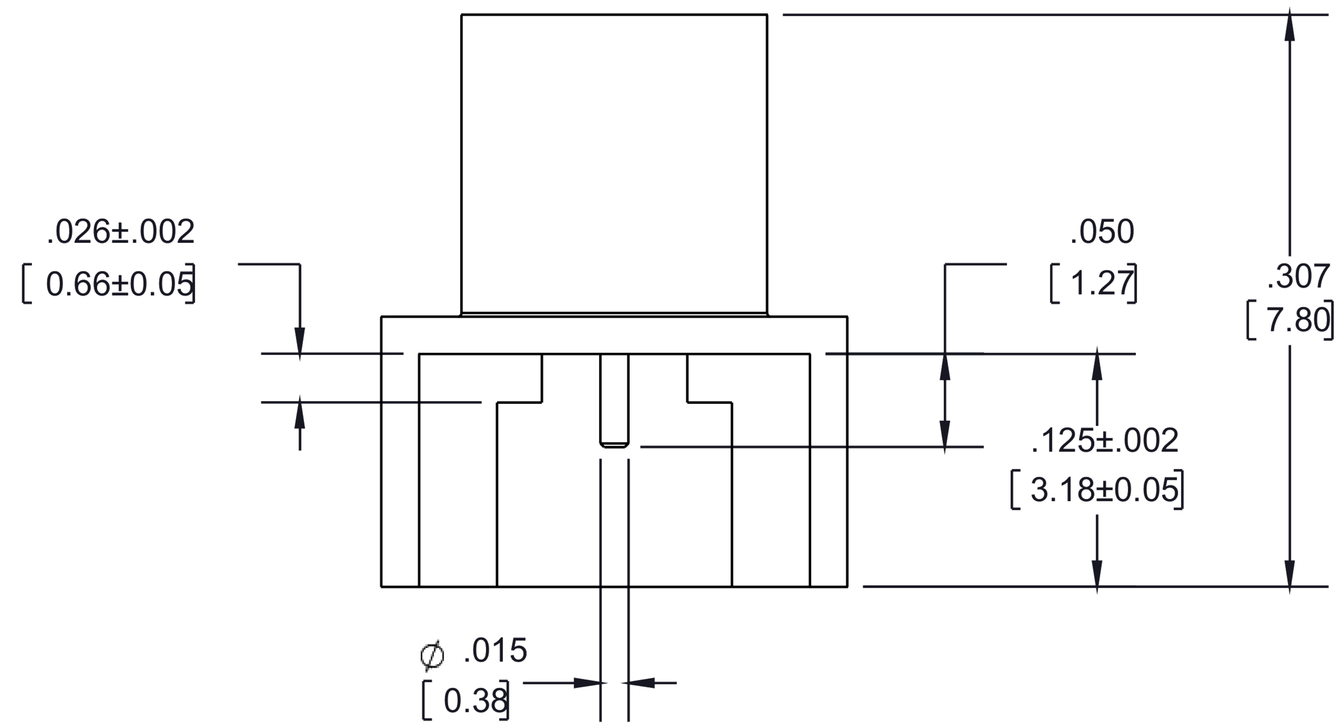

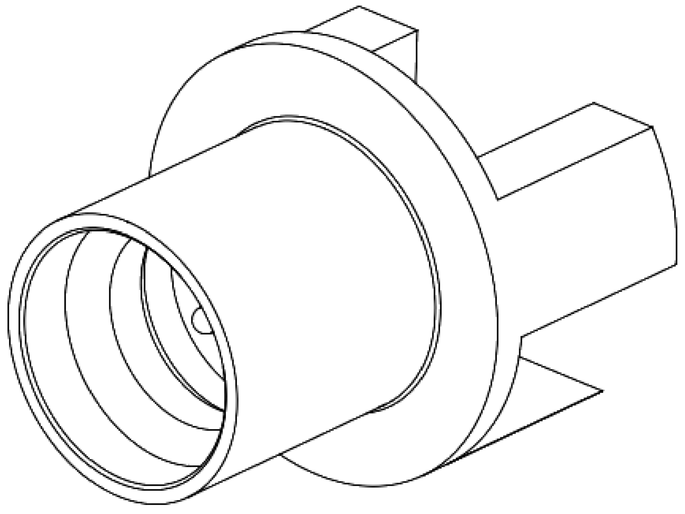

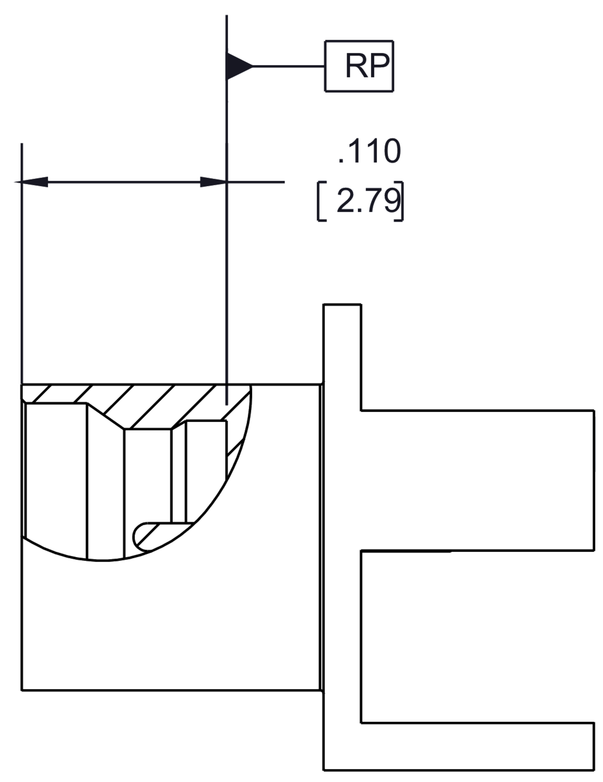

SMP MALE

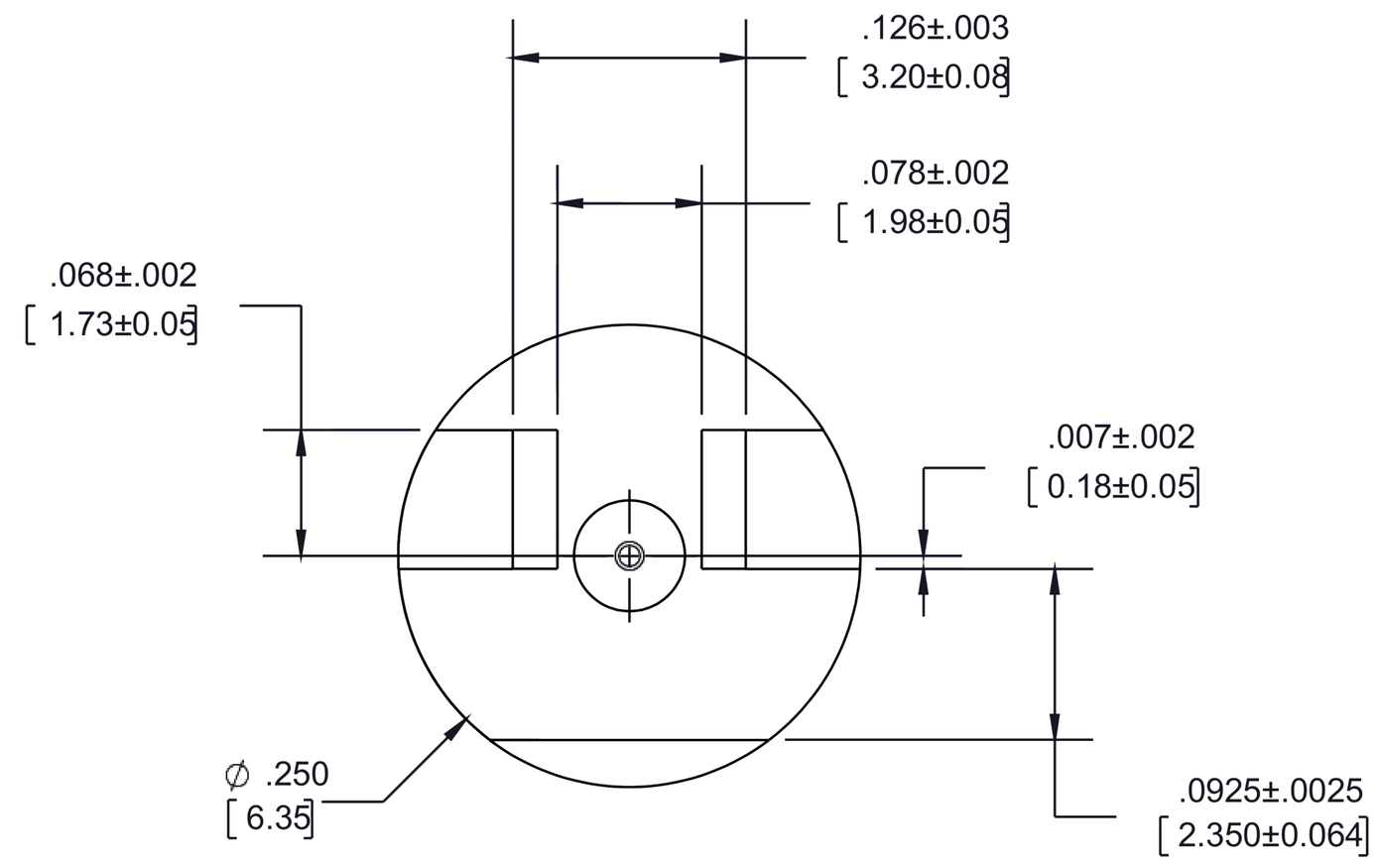

STANDARD TOLERANCES	
.X	±0.2
.XX	±0.01
.XXX	±0.005

*STANDARD TOLERANCES APPLY ONLY TO DIMENSIONS IN INCHES

ebeestock
Ebeestock.com
8th Floor, Building 1, Yongfu Science
and Technology Center Industrial Park,
Nanzha District 5, Humen,523900, Dongguan, Guangdong, China.
Webstie: www.ebeestock.com **Email:** sales@ebeestock.com

DWG TITLE

ET11567

NOTES:
1. UNLESS OTHERWISE SPECIFIED ALL DIMENSIONS ARE NOMINAL.
2. ALL SPECIFICATIONS ARE SUBJECT TO CHANGE WITHOUT NOTICE AT ANY TIME.
3. DIMENSIONS ARE IN INCHES [mm].

CAGE CODE 53919	CAD FILE 05/11/18	SCALE N/A	SIZE A	7361

© 2022 Ebeestock Enterprises All Rights Reserved