SSMC Jack Bulkhead Mount Connector Crimp/Solder Attachment f
or ET-RG-178, ET-RG-196

RF Connectors
Technical Data Sheet

ET11662

Configuration

- SSMC Jack Connector
- 50 Ohms
- Straight Body Geometry
- ET-RG-178, ET-RG-196 Interface Type
- Crimp/Solder Attachment
- Bulkhead

Features

- Max. Operating Frequency 12.4 GHz
- Good VSWR of 1.44:1
- Gold Plated Beryllium Copper Contact
- Contact plating according to MIL-G-45204
- Reliable threaded coupling
- Small SSMC connector form factor (50% smaller than SMA, radially)
- IEC 60169-20 SSMC connector interface
- In stock and ready to ship

Applications

- General Purpose Test
- Rack and Panel Mount Applications
- Custom Cable Assemblies
- Avionics
- A/D Modules
- Data Acquisition
- Software defined radio (SDR)
- RADAR/SONAR
- Ultra Wideband Digital Receivers
- Medical equipment

Description

Ebeestock's ET11662 SSMC jack bulkhead connector with crimp/solder attachment for ET-RG-178 and ET-RG-196 is part of our full line of RF components available for same-day shipping. Our SSMC jack connector operates up to a maximum frequency of
12.4 GHz and offers good VSWR of 1.44:1. This SSMC bulkhead connector allows designers to create external connections on their product enclosures, and can be used in a variety of other rack mount and panel mount applications.

Our SSMC jack bulkhead connector ET11662 datasheet specifications and drawing with dimensions are shown below in this PDF. Ebeestock's broad catalog of RF, microwave and millimeter wave connectors allows designers to configure and customize their signal connections however they like. Whether the need is to provide an I/O for a board design, or simply create a custom cable assembly configuration, Ebeestock has the right connector for the job. Ebeestock can also expertly build your custom cable assemblies for you and ship same-day.

Electrical Specifications

Description	Minimum	Typical	Maximum	Units
Frequency Range	DC		12.4	GHz
VSWR			1.44:1	
Insertion Loss			0.3	dB
Operating Voltage (AC)			250	Vrms
High Potential Voltage 5 MHz			400	Vrms
Inner Conductor DC Resistance			4	mOhms
Outer Conductor DC Resistance			1	mOhms
Insulation Resistance	1,000			MOhms

Click the following link (or enter part number in "SEARCH" on website) to obtain additional part information including price, inventory and certifications: SSMC Jack Bulkhead Mount Connector Crimp/Solder Attachment for ET-RG-178,

8th Floor, Building 1, Yongfu Science and Technology Center Industrial Park,
Nanzha District 5, Humen,523900, Dongguan, Guangdong, China.

Webstie:www.ebeestock.com Email:sales@ebeestock.com

© 2022 Ebeestock Enterprises All Rights Reserved

SSMC Jack Bulkhead Mount Connector Crimp/Solder Attachment f
or ET-RG-178, ET-RG-196

RF Connectors

ET-RG-196 ET11662

8th Floor, Building 1, Yongfu Science and Technology Center Industrial Park,
Nanzha District 5, Humen,523900, Dongguan, Guangdong, China.

Webstie:www.ebeestock.com Email:sales@ebeestock.com

© 2022 Ebeestock Enterprises All Rights Reserved

SSMC Jack Bulkhead Mount Connector Crimp/Solder Attachment f
or ET-RG-178, ET-RG-196

RF Connectors
Technical Data Sheet

ET11662

RF Leakage -50 dB

Mechanical Specifications

Size

Length	0.74 in [18.8 mm]
Width/Dia.	0.156 in [3.96 mm]
Mating Cycles	500 Cycles
Mating Torque	1.75 to 2 in-lbs [0.20 to 0.23 Nm]

Material Specifications

Description	Material	Plating
Contact	Beryllium Copper	Gold MIL-G-45204
Insulation	Teflon	
Outer Conductor	Beryllium Copper	Gold MIL-G-45204
Body	Beryllium Copper	Gold MIL-G-45204
Crimp Sleeve	Brass	Gold MIL-G-45204
Washer	Phosphor Bronze	Gold MIL-G-45204

Environmental Specifications

Temperature

Operating Range	-65 to +165 deg C
Shock	Method 213, Condition B, 75G @6ms @1/2 sine
Vibration	Method 204, Condition D (20G)
Salt Spray	Method 101, Condition B, 5% salt solution

Compliance Certifications (see product page for current document)

Plotted and Other Data

Notes:

Click the following link (or enter part number in “SEARCH” on website) to obtain additional part information including price, inventory and certifications: SSMC Jack Bulkhead Mount Connector Crimp/Solder Attachment for ET-RG-178, ET-RG-196 ET11662

8th Floor, Building 1, Yongfu Science and Technology Center Industrial Park,
Nanzha District 5, Humen,523900, Dongguan, Guangdong, China.

Webstie:www.ebeestock.com Email:sales@ebeestock.com

© 2022 Ebeestock Enterprises All Rights Reserved

SSMC Jack Bulkhead Mount Connector Crimp/Solder Attachment f
or ET-RG-178, ET-RG-196

RF Connectors
Technical Data Sheet

ET11662

Assembly Instruction

Assembly Instructions

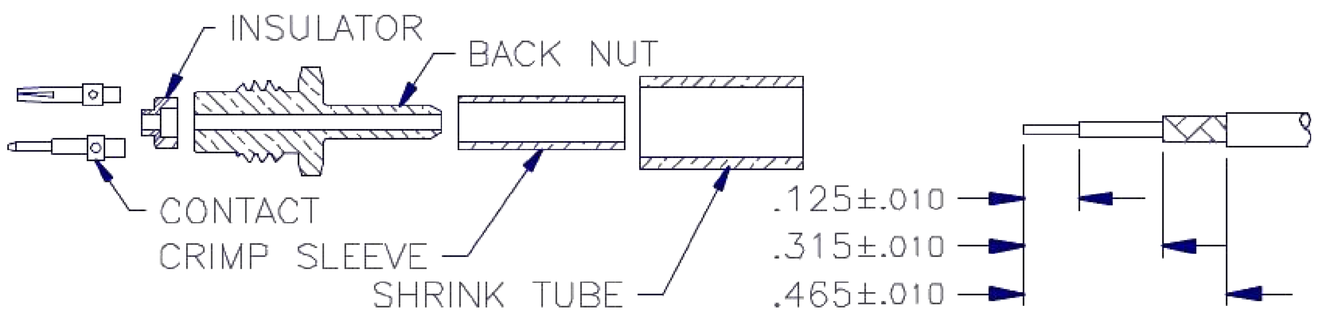

1. TRIM CABLE AS SHOWN ABOVE. TIN END OF CENTER CONDUCTOR.
2. SLIDE CRIMP SLEEVE AND SHRINK TUBE (IF SUPPLIED) OVER CABLE JACKET.
3. FLARE CABLE BRAID OUT SLIGHTLY BY ROTATING DIELECTRIC.

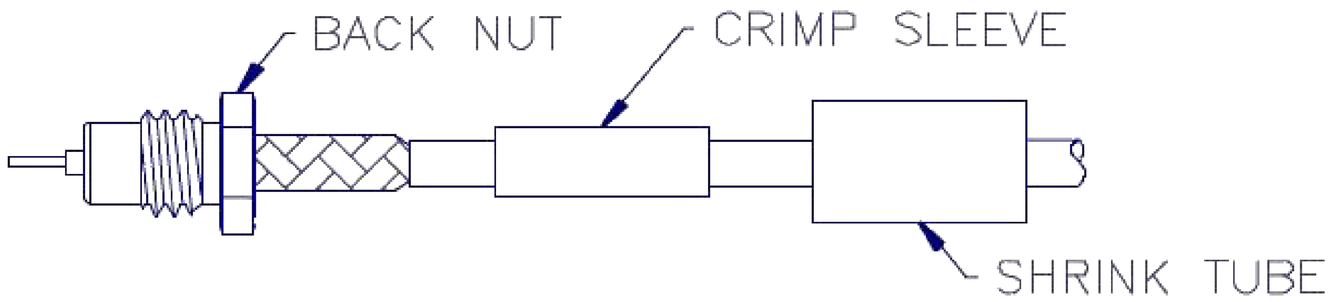

4. INSERT CABLE INTO TAIL-END OF BACK NUT, MAKING SURE TAIL GOES OVER DIELECTRIC AND UNDER BRAID. SLIDE IN UNTIL BRAID TOUCHES REAR SURFACE OF NUT.
5. SLIDE CRIMP SLEEVE FORWARD AND USE .105 HEX DIE TO CRIMP.

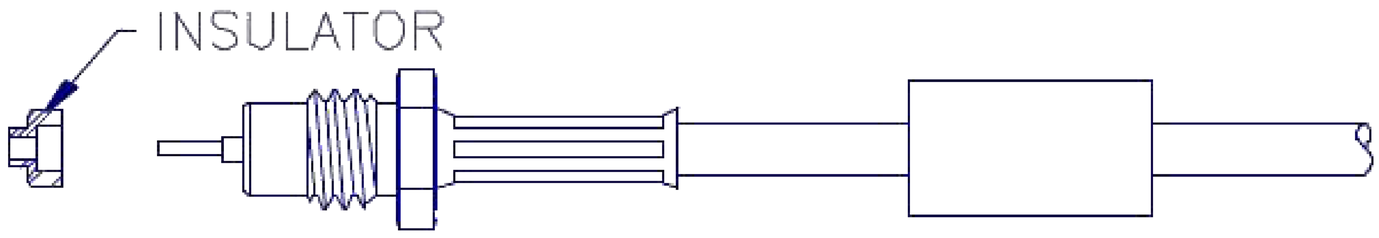

6. POSITION INSULATOR OVER CABLE DIELECTIC AND CENTER CONDUCTOR.

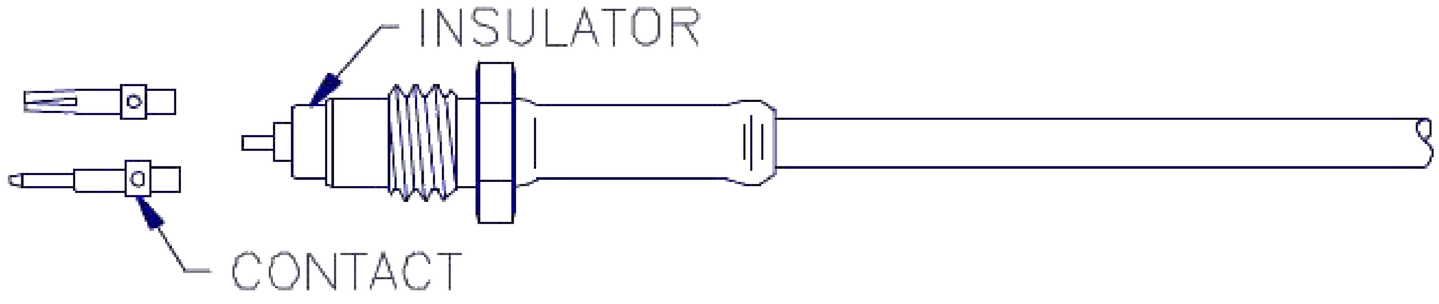

7. SOLDER CONTACT TO CENTER CONDUCTOR.
8. INSERT CAABLE ASSEMBLY INTO BODY AND TIGHTEN NUT WITH A TORQUE WRENCH WITH A TORQUE OF 35-45 INCH-OUNCES.
9. SLIDE SHRINK TUBE (IF SUPPLIED) OVER CRIMP SLEEVE AND SHRINK TO FIT.

Click the following link (or enter part number in “SEARCH” on website) to obtain additional part information including price, inventory and certifications: SSMC Jack Bulkhead Mount Connector Crimp/Solder Attachment for ET-RG-178, ET-RG-196 ET11662

8th Floor, Building 1, Yongfu Science and Technology Center Industrial Park,
Nanzha District 5, Humen,523900, Dongguan, Guangdong, China.

Webstie:www.ebeestock.com Email:sales@ebeestock.com

© 2022 Ebeestock Enterprises All Rights Reserved

SSMC Jack Bulkhead Mount Connector Crimp/Solder Attachment f

or ET-RG-178, ET-RG-196

RF Connectors
Technical Data Sheet

ET11662

SSMC Jack Bulkhead Mount Connector Crimp/Solder Attachment for ET-RG-178, ET-RG-196 from Ebeestock Enterprises has same day shipment for domestic and International orders. Our RF, microwave and millimeter wave products maintain a 99.4% availability and are part of the broadest selection in the industry.

Click the following link (or enter part number in “SEARCH” on website) to obtain additional part information including price, inventory and certifications: SSMC Jack Bulkhead Mount Connector Crimp/Solder Attachment for ET-RG-178, ET-RG-196

URL: https://www.ebeestock.com/ssmc-jack-bulkhead-mount-connector-crimp-solder-attachment-for-rg-178-rg-196-0011662

The information contained in this document is accurate to the best of our knowledge and representative of the part described herein. It may be necessary to make modifications to the part and/or the documentation of the part, in order to implement improvements. Ebeestock reserves the right to make such changes as required. Unless otherwise stated, all specifications are nominal. Ebeestock does not make any representation or warranty regarding the suitability of the part described herein for any particular purpose, and Ebeestock does not assume any liability arising out of the use of any part or documentation.

8th Floor, Building 1, Yongfu Science and Technology Center Industrial Park,
Nanzha District 5, Humen,523900, Dongguan, Guangdong, China.

Webstie:www.ebeestock.com Email:sales@ebeestock.com

© 2022 Ebeestock Enterprises All Rights Reserved

© 2022 Ebeestock Enterprises All Rights Reserved

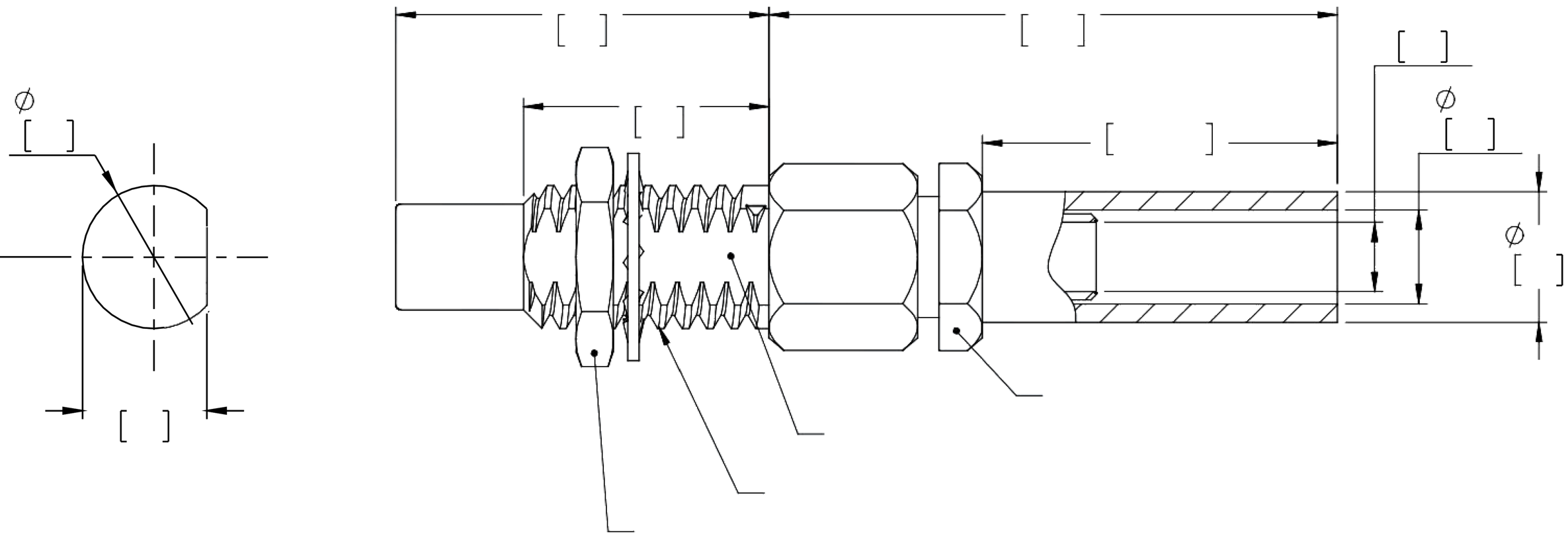

*STANDARD TOLERANCES APPLY
ONLY TO DIMENSIONS IN INCHES

ebeestock
Ebeestock.com
8th Floor, Building 1, Yongfu Science
and Technology Center Industrial Park,
Nanzha District 5, Humen,523900, Dongguan, Guangdong, China.
Webstie: www.ebeestock.com **Email:** sales@ebeestock.com

DWG TITLE	NOTES: 1. UNLESS OTHERWISE SPECIFIED ALL DIMENSIONS ARE NOMINAL. 2. ALL SPECIFICATIONS ARE SUBJECT TO CHANGE WITHOUT NOTICE AT ANY TIME 3. DIMENSIONS ARE IN INCHES [mm].		
CAGE CODE 53919	CAD FILE	SCALE N/A	SIZE A