RP TNC Male Connector Crimp/Solder Attachment for ET-RG59, ET-RG62, ET-RG71

RF Connectors Technical Data Sheet ET11789

Configuration

- TNC Male Reverse Polarity Connector MIL-C-39012
- 50 Ohms
- Straight Body Geometry
- ET-RG59, ET-RG62, ET-RG71 Interface Type
- Crimp/Solder Attachment

Features

- Gold Plated Brass Contact
- 3 µin minimum contact plating
- Reverse Polarity

Applications

- General Purpose Test
- Custom Cable Assemblies

Description

Ebeestock's ET11789 RP TNC male connector with crimp/solder attachment for ET-RG59, ET-RG62 and ET-RG71 is part of our full line of RF components available for same-day shipping. The male reverse polarity configuration uses a male connector body with a female inner contact receptacle.

Our reverse polarity TNC male connector ET11789 datasheet specifications and drawing with dimensions are shown below in this PDF. Ebeestock's broad catalog of RF, microwave and millimeter wave connectors allows designers to configure and customize their signal connections however they like. Whether the need is to provide an I/O for a board design, or simply create a custom cable assembly configuration, Ebeestock has the right connector for the job. Ebeestock can also expertly build your custom cable assemblies for you and ship same-day.

Mechanical Specifications

Size

Length	1.135 in [28.83 mm]
Width/Dia.	0.59 in [14.99 mm]
Weight	0.034 lbs [15.42 g]

Material Specifications

Description	Material	Plating
Contact	Brass	Gold 3 µin minimum
Insulation	PTFE	
Body	Brass	Nickel 70 µin minimum
Coupling Nut	Brass	Nickel 70 µin minimum

Click the following link (or enter part number in "SEARCH" on website) to obtain additional part information including price, inventory and certifications: RP TNC Male Connector Crimp/Solder Attachment for ET-RG59, ET-RG62, ET-RG71 ET11789

8th Floor, Building 1, Yongfu Science and Technology Center Industrial Park,
Nanzha District 5, Humen,523900, Dongguan, Guangdong, China.

Webstie:www.ebeestock.com Email:sales@ebeestock.com

© 2022 Ebeestock Enterprises All Rights Reserved

RP TNC Male Connector Crimp/Solder Attachment for ET-RG59, E
T-ET-RG62, ET-RG71

RF Connectors Technical Data Sheet ET11789

Compliance Certifications (see product page for current document)

Plotted and Other Data

Notes:

RP TNC Male Connector Crimp/Solder Attachment for ET-RG59, ET-RG62, ET-RG71 from Ebeestock Enterprises has same day shipment for domestic and International orders. Our RF, microwave and millimeter wave products maintain a 99% availability and are part of the broadest selection in the industry.

Click the following link (or enter part number in “SEARCH” on website) to obtain additional part information including price, inventory and certifications: RP TNC Male Connector Crimp/Solder Attachment for ET-RG59, ET-RG62, ET-RG71 ET11789

URL: https://www.ebeestock.com/rp-tnc-male-connector-crimp-solder-attachment-for-rg59-rg62-rg71-0011789

The information contained in this document is accurate to the best of our knowledge and representative of the part described herein. It may be necessary to make modifications to the part and/or the documentation of the part, in order to implement improvements. Ebeestock reserves the right to make such changes as required. Unless otherwise stated, all specifications are nominal. Ebeestock does not make any representation or warranty regarding the suitability of the part described herein for any particular purpose, and Ebeestock does not assume any liability arising out of the use of any part or documentation.

8th Floor, Building 1, Yongfu Science and Technology Center Industrial Park,
Nanzha District 5, Humen,523900, Dongguan, Guangdong, China.

Webstie:www.ebeestock.com Email:sales@ebeestock.com

© 2022 Ebeestock Enterprises All Rights Reserved

ET11789 CAD Drawing

RP TNC Male Connector Crimp/Solder Attachment for ET-RG59, ET-RG62, ET-RG71

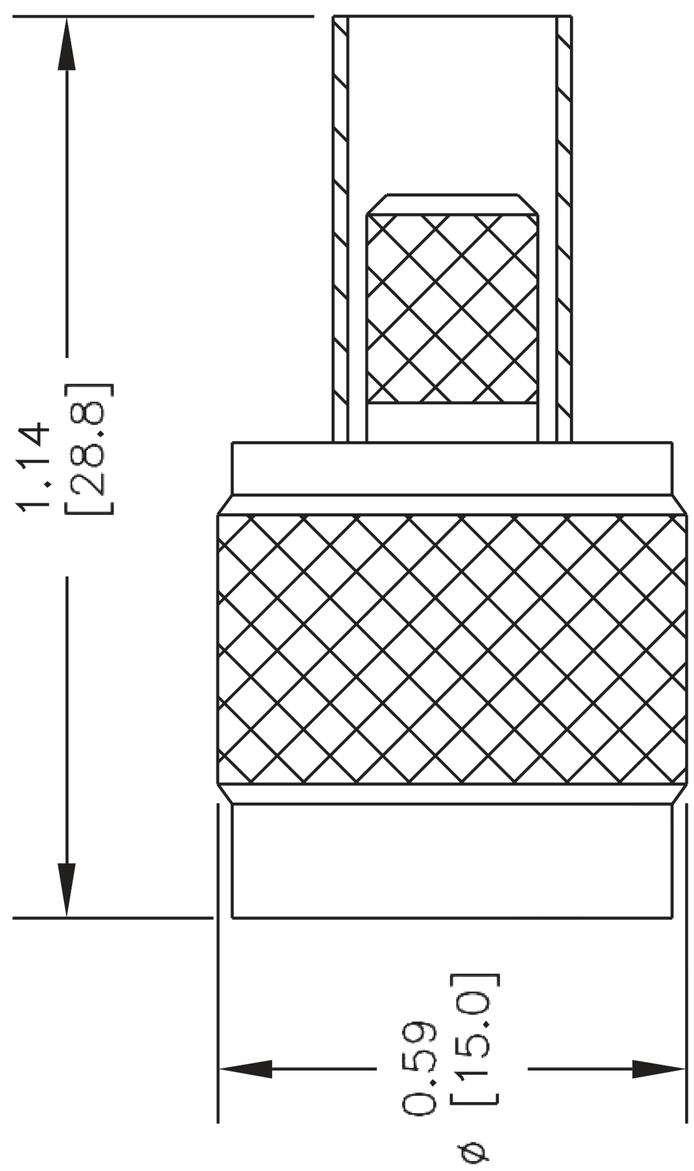

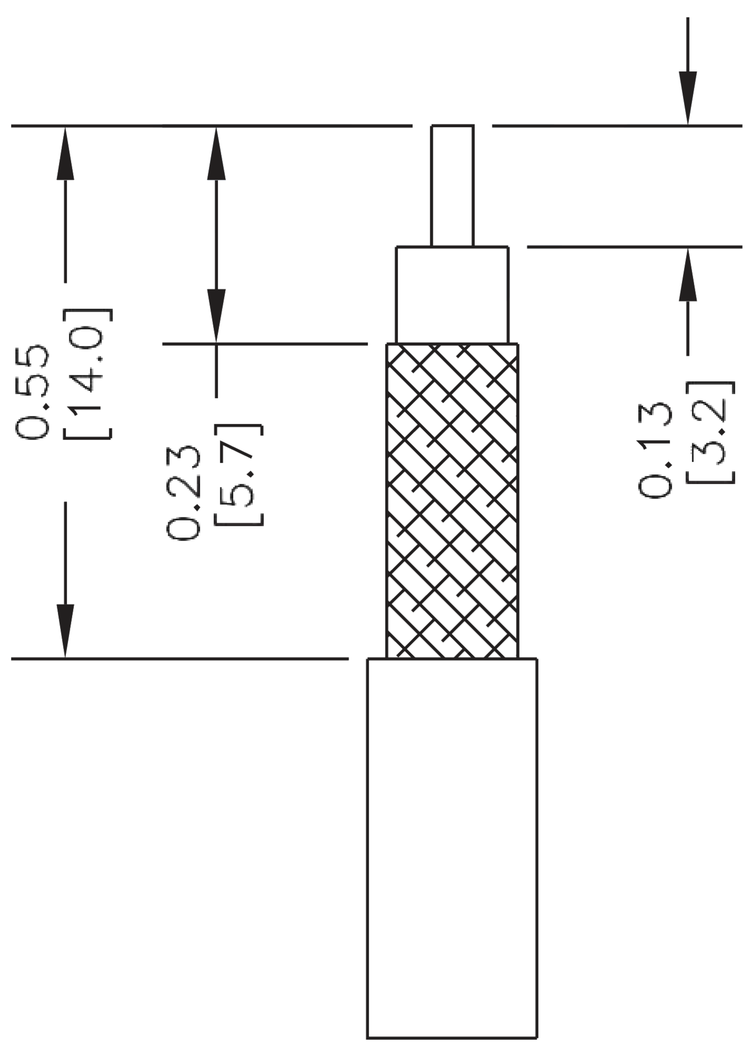

STRIPPING DIMENSIONS

CRIMP SIZE REQUIRED

CONTACT: .068" HEX CRIMP TOOL
FERRULE: .255" HEX CRIMP TOOL

NOTES:
1. UNLESS OTHERWISE SPECIFIED ALL DIMENSIONS ARE NOMINAL.
2. ALL SPECIFICATIONS ARE SUBJECT TO CHANGE WITHOUT NOTICE AT ANY TIME.
3. DIMENSIONS ARE IN INCHES [mm].
4. FITS MIL-C-17 AND EQUIVALENT CABLES.

DWG TITLE	CAD FILE 052902	SCALE N/A	SIZE A	2233
ET11789	FSCM NO. 53919			

ebeestock
Ebeestock.com
8th Floor, Building 1, Yongfu Science and Technology Center Industrial Park, Nanzha District 5, Humen,523900, Dongguan, Guangdong, China.
Webstie: www.ebeestock.com Email: sales@ebeestock.com

© 2022 Ebeestock Enterprises All Rights Reserved

© 2022 Ebeestock Enterprises All Rights Reserved