RP TNC Male Connector Crimp/Solder Attachment for ET-ET-RG174, ET-RG316, ET-RG188, ET-LMR-100, ET-B100, ET-C100, 0.100 inch

RF Connectors Technical Data Sheet ET11791

Configuration

- TNC Male Reverse Polarity Connector MIL-C-39012
- 50 Ohms
- Straight Body Geometry
- ET-RG174, ET-RG316, ET-RG188, ET-LMR-100, ET-B100, ET-C100, .100 inch Interface Type
- Crimp/Solder Attachment

Features

- Max. Operating Frequency 11 GHz
- Gold Plated Brass Contact
- 30 µin minimum contact plating
- Reverse Polarity

Applications

- General Purpose Test
- Custom Cable Assemblies

Description

Ebeestock's ET11791 RP TNC male connector with crimp/solder attachment for ET-RG174, ET-RG316, ET-RG188, ET-LMR-100, ET-B100, ET-C100 and .100 inch is part of our full line of RF components available for same-day shipping. The male reverse polarity configuration uses a male connector body with a female inner contact receptacle. Our TNC male connector operates up to a maximum frequency of 11 GHz.

Our reverse polarity TNC male connector ET11791 datasheet specifications and drawing with dimensions are shown below in this PDF. Ebeestock's broad catalog of RF, microwave and millimeter wave connectors allows designers to configure and customize their signal connections however they like. Whether the need is to provide an I/O for a board design, or simply create a custom cable assembly configuration, Ebeestock has the right connector for the job. Ebeestock can also expertly build your custom cable assemblies for you and ship same-day.

Electrical Specifications

Description	Minimum	Typical	Maximum	Units
Frequency Range	DC		11	GHz
Operating Voltage (AC)			500	Vrms
Dielectric Withstanding Voltage (AC)			1,500	Vrms
Insulation Resistance	5,000			MOhms

Mechanical Specifications

Size	
Length	1.23 in [31.24 mm]
Width/Dia.	0.6 in [15.24 mm]
Weight	0.037 lbs [16.78 g]

Click the following link (or enter part number in "SEARCH" on website) to obtain additional part information including price, inventory and certifications: RP TNC Male Connector Crimp/Solder Attachment for ET-RG174, ET-RG316, ET-RG188, ET-LMR-100, ET- B100, ET-C100, 0.100 inch ET11791

8th Floor, Building 1, Yongfu Science and Technology Center Industrial Park,
Nanzha District 5, Humen,523900, Dongguan, Guangdong, China.

Webstie:www.ebeestock.com Email:sales@ebeestock.com

© 2022 Ebeestock Enterprises All Rights Reserved

RP TNC Male Connector Crimp/Solder Attachment for ET-ET-RG174, ET-RG316, ET-RG188, ET-LMR-100, ET-B100, ET-C100, 0.100 inch

RF Connectors
Technical Data Sheet ET11791

Material Specifications

Description	Material	Plating
Contact	Brass	Gold 30 µin minimum
Insulation	PTFE	
Body	Brass	Nickel 200 µin minimum
Coupling Nut	Brass	Nickel 200 µin minimum

Environmental Specifications

Temperature

Operating Range -65 to +165 deg C

Compliance Certifications (see product page for current document)

Plotted and Other Data

Notes:

Click the following link (or enter part number in “SEARCH” on website) to obtain additional part information including price, inventory and certifications: RP TNC Male Connector Crimp/Solder Attachment for ET-RG174, ET-RG316, ET-RG188, ET-LMR-100, ET- B100, ET-C100, 0.100 inch ET11791

8th Floor, Building 1, Yongfu Science and Technology Center Industrial Park,
Nanzha District 5, Humen,523900, Dongguan, Guangdong, China.

Webstie:www.ebeestock.com Email:sales@ebeestock.com

© 2022 Ebeestock Enterprises All Rights Reserved

RP TNC Male Connector Crimp/Solder Attachment for ET-ET-RG174, ET-RG316, ET-RG188, ET-LMR-100, ET-B100, ET-C100, 0.100 inch

RF Connectors Technical Data Sheet ET11791

Assembly Instruction

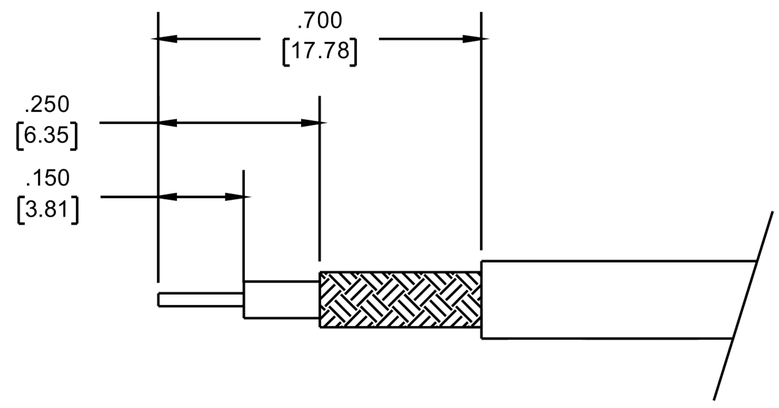

STRIPPING DIMENSIONS

ASSEMBLY PROCEDURES

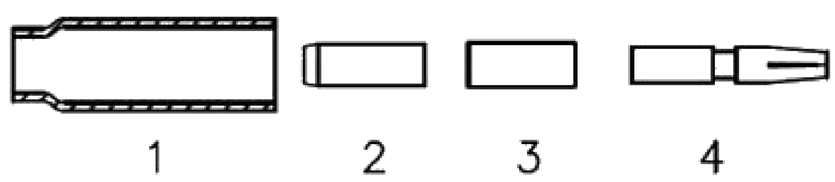

1. **STRIP CABLE AS SHOWN & SLIDE FERRULE (1) ONTO CABLE.**

2. **FLARE END OF CABLE BRAID & SLIDE METAL SPACER (2) & PTFE (3) SPACER OVER CABLE DIELECTRIC.**

3. **THE CONTACT (4) SHOULD BUTT AGAINST THE DIELECTRIC & PTFE SPACER. CRIMP CONTACT TO CABLE CENTER CONDUCTOR.**

4. **INSTALL CABLE ASSEMBLY INTO BODY SO THAT THE INNER FERRULE PORTION OF BODY SLIDES UNDER BRAID. PUSH CABLE ASSEMBLY FORWARD UNTIL CONTACT SNAPS INTO PLACE. SLIDE FERRULE OVER BRAID AND UP AGAINST CONNECTOR BODY & CRIMP.**

Click the following link (or enter part number in “SEARCH” on website) to obtain additional part information including price, inventory and certifications: RP TNC Male Connector Crimp/Solder Attachment for ET-RG174, ET-RG316, ET-RG188, ET-LMR-100, ET- B100, ET-C100, 0.100 inch ET11791

8th Floor, Building 1, Yongfu Science and Technology Center Industrial Park,
Nanzha District 5, Humen,523900, Dongguan, Guangdong, China.

Webstie:www.ebeestock.com Email:sales@ebeestock.com

© 2022 Ebeestock Enterprises All Rights Reserved

RP TNC Male Connector Crimp/Solder Attachment for ET-ET-RG174, ET-RG316, ET-RG188, ET-LMR-100, ET-B100, ET-C100, 0.100 inch

RF Connectors
Technical Data Sheet ET11791

RP TNC Male Connector Crimp/Solder Attachment for ET-RG174, ET-RG316, ET-RG188, ET-LMR-100, ET-B100, ET-C100, 0.100 inch from Ebeestock Enterprises has same day shipment for domestic and International orders. Our RF, microwave and millimeter wave products maintain a 99.4% availability and are part of the broadest selection in the industry.

Click the following link (or enter part number in “SEARCH” on website) to obtain additional part information including price, inventory and certifications: RP TNC Male Connector Crimp/Solder Attachment for ET-RG174, ET-RG316, ET-RG188, ET-LMR-100, ET- B100, ET-C100, 0.100 inch ET11791

URL: https://www.ebeestock.com/rp-tnc-male-connector-crimp-solder-attachment-for-rg174-rg316-rg188-lmr-100-pe-b100-pe-c100-0-100-inch-0011791

The information contained in this document is accurate to the best of our knowledge and representative of the part described herein. It may be necessary to make modifications to the part and/or the documentation of the part, in order to implement improvements. Ebeestock reserves the right to make such changes as required. Unless otherwise stated, all specifications are nominal. Ebeestock does not make any representation or warranty regarding the suitability of the part described herein for any particular purpose, and Ebeestock does not assume any liability arising out of the use of any part or documentation.

8th Floor, Building 1, Yongfu Science and Technology Center Industrial Park,
Nanzha District 5, Humen,523900, Dongguan, Guangdong, China.

Webstie:www.ebeestock.com Email:sales@ebeestock.com

© 2022 Ebeestock Enterprises All Rights Reserved

© 2022 Ebeestock Enterprises All Rights Reserved

www.ebeestock.com

REVISIONS			
REV.	DESCRIPTION	DATE	APPROVED
1.1	PCR PE45180 20190530	06/21/19	SELLIS

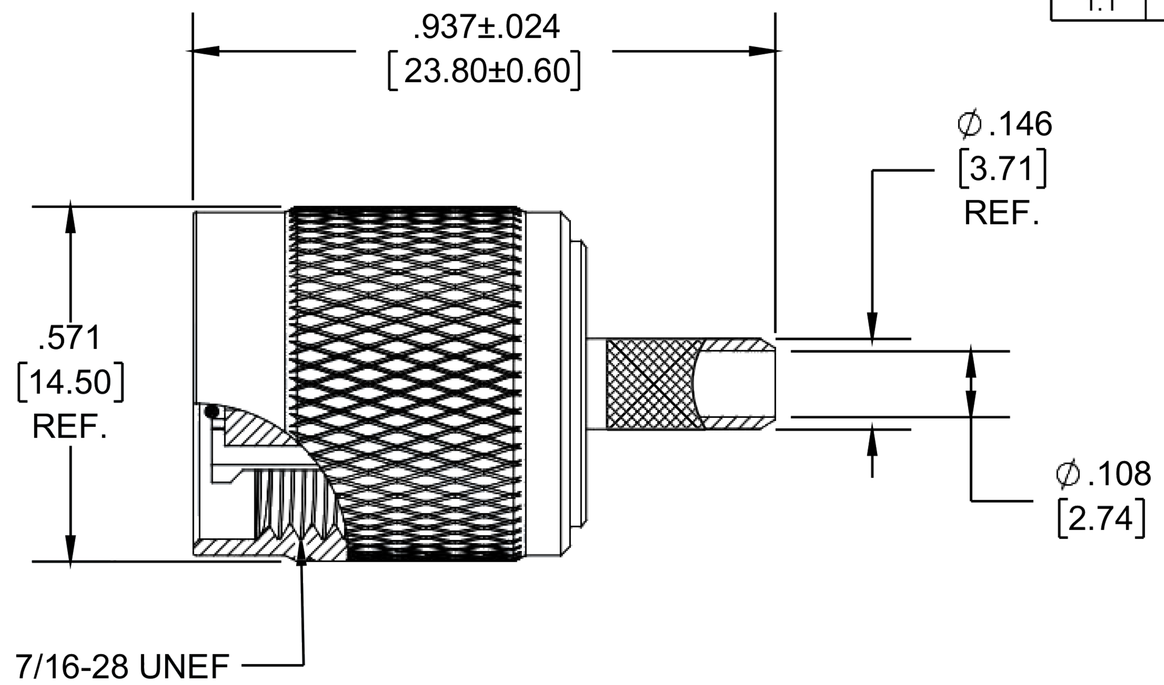

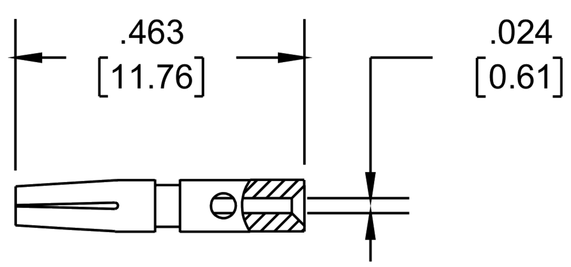

CONTACT

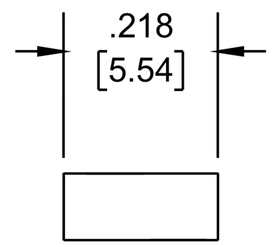

INSULATION

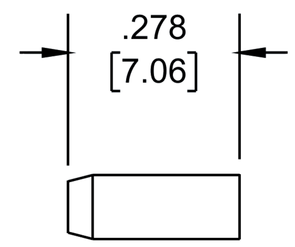

METAL SPACER

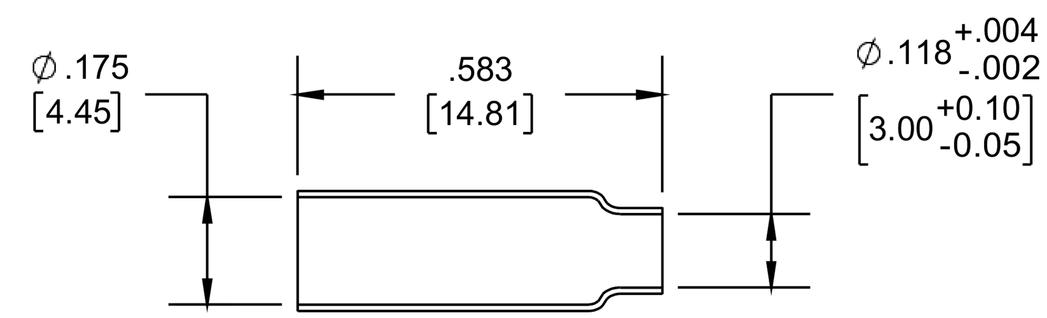

FERRULE

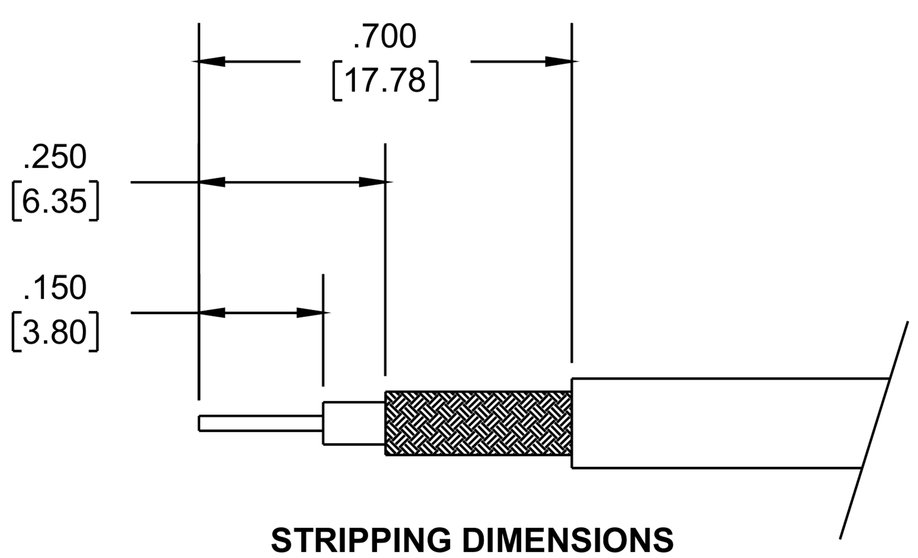

STRIPPING DIMENSIONS

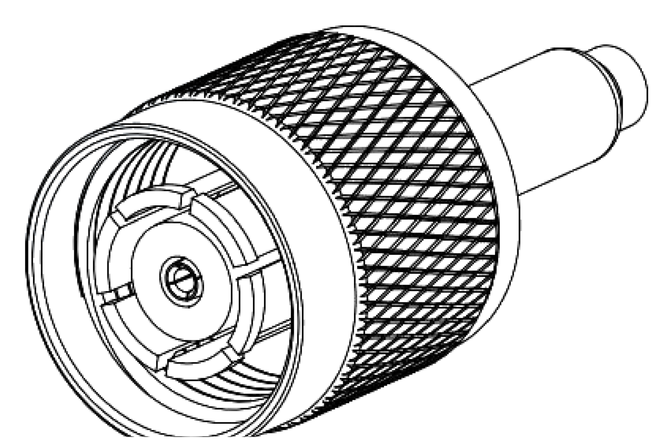

NOTES:

1. CABLE ATTACHMENT:
   - OUTER: CRIMP.
   - INNER: SOLDER/CRIMP.
2. CRIMP SIZE REQUIRED:
   - FERRULE: .178 [4.52] HEX. CRIMP TOOL.
   - CONTACT: .068 [1.73] HEX. CRIMP TOOL

UNLESS OTHERWISE SPECIFIED
LEADING DIMENSIONS ARE INCHES
DIMENSIONS IN [ ] ARE MILLIMETERS

TOLERANCES:

.X=± .2	[5.08]	FRACTIONS
.XX=± .01	[.25]	± 1/32
.XXX=± .005	[.13]	ANGLES ± 1°

ALL DIMENSIONS SHOWN
ARE FOR REFERENCE ONLY.

THIRD ANGLE PROJECTION

ebeestock
Ebeestock.com
8th Floor, Building 1, Yongfu Science
and Technology Center Industrial Park,
Nanzha District 5, Humen,523900, Dongguan, Guangdong, China.
Webstie: www.ebeestock.com **Email:** sales@ebeestock.com

THE INFORMATION AND
DESIGN IN THIS DOCUMENT
IS THE PROPERTY OF
Ebeestock CORPORATION.
ALL RIGHTS RESERVED.

SHEET 1 OF 2

SCALE N/A

SIZE	CAGE	DRAWN BY	PART NUMBER	REV
A	53919	KDANG	ET1179	1.1

THESE COMMODITIES, TECHNOLOGY OR SOFTWARE WERE EXPORTED FROM THE UNITED STATES IN ACCORDANCE WITH THE EXPORT ADMINISTRATION REGULATIONS. DIVERSION CONTRARY TO U.S. LAW PROHIBITED.

T-Rev.A

© 2022 Ebeestock Enterprises All Rights Reserved