RP TNC Male Connector Clamp/Solder Attachment For ET38330, E T38329

RF Connectors
Technical Data Sheet ET11797

Configuration

- TNC Male Reverse Polarity Connector
- 50 Ohms
- Straight Body Geometry
- Connector Interface Types: ET38330, ET38329

Features

- Gold Plated Brass Contact
- 3µ-5µ in. minimum contact plating
- Reverse Polarity

Applications

- General Purpose Test
- Custom Cable Assemblies

Description

Ebeestock's ET11797 RP TNC male connector with clamp/solder attachment for ET38330 and ET38329 is part of our full line of RF components available for same-day shipping. The male reverse polarity configuration uses a male connector body with a female inner contact receptacle.

Our reverse polarity TNC male connector ET11797 datasheet specifications and drawing with dimensions are shown below in this PDF. Ebeestock's broad catalog of RF, microwave and millimeter wave connectors allows designers to configure and customize their signal connections however they like. Whether the need is to provide an I/O for a board design, or simply create a custom cable assembly configuration, Ebeestock has the right connector for the job. Ebeestock can also expertly build your custom cable assemblies for you and ship same-day.

Mechanical Specifications

Size	
Length	1.695 in [43.05 mm]
Width/Dia.	0.75 in [19.05 mm]
Weight	0.097 lbs [44 g]

Click the following link (or enter part number in "SEARCH" on website) to obtain additional part information including price, inventory and certifications: RP TNC Male Connector Clamp/Solder Attachment For ET38330, ET38329 ET11797

8th Floor, Building 1, Yongfu Science and Technology Center Industrial Park,
Nanzha District 5, Humen,523900, Dongguan, Guangdong, China.

Webstie:www.ebeestock.com Email:sales@ebeestock.com

© 2022 Ebeestock Enterprises All Rights Reserved

RP TNC Male Connector Clamp/Solder Attachment For ET38330, E T38329

RF Connectors
Technical Data Sheet ET11797

Material Specifications

Description	Material	Plating
Contact	Brass	Gold 3μ-5μ in. minimum
Insulation	Teflon	
Body	Brass	Nickel 70μ in. minimum
Coupling Nut	Brass	Nickel 70μ in. minimum

Mechanical Specification Notes:
When attaching the connector to the cable use a clamp torque value of 60 to 65 in-lbs [6.78 to 7.34 Nm]

Environmental Specifications

Compliance Certifications (see product page for current document)

Plotted and Other Data

Notes:

RP TNC Male Connector Clamp/Solder Attachment For ET38330, ET38329 from Ebeestock Enterprises has same day shipment for domestic and International orders. Our RF, microwave and millimeter wave products maintain a 99.4% availability and are part of the broadest selection in the industry.

Click the following link (or enter part number in “SEARCH” on website) to obtain additional part information including price, inventory and certifications: RP TNC Male Connector Clamp/Solder Attachment For ET38330, ET38329 ET11797

URL: https://www.ebeestock.com/rp-tnc-male-connector-clamp-solder-attachment-for-pe-b400-pe-b405-0011797

The information contained in this document is accurate to the best of our knowledge and representative of the part described herein. It may be necessary to make modifications to the part and/or the documentation of the part, in order to implement improvements. Ebeestock reserves the right to make such changes as required. Unless otherwise stated, all specifications are nominal. Ebeestock does not make any representation or warranty regarding the suitability of the part described herein for any particular purpose, and Ebeestock does not assume any liability arising out of the use of any part or documentation.

8th Floor, Building 1, Yongfu Science and Technology Center Industrial Park,
Nanzha District 5, Humen,523900, Dongguan, Guangdong, China.

Webstie:www.ebeestock.com Email:sales@ebeestock.com

© 2022 Ebeestock Enterprises All Rights Reserved

© 2022 Ebeestock Enterprises All Rights Reserved

www.ebeestock.com

ASSEMBLY PROCEDURES

1. SLIDE CLAMP NUT (1), WASHER (2) & GASKET (3) OVER CABLE. STRIP CABLE AS SHOWN. DO NOT NICK BRAID WHILE CUTTING JACKET. TAPER END OF BRAID TO PERMIT ASSEMBLY OF BRAID CLAMP (4). SLIDE BRAID CLAMP (4) OVER BRAID & SEAT AGAINST JACKET.

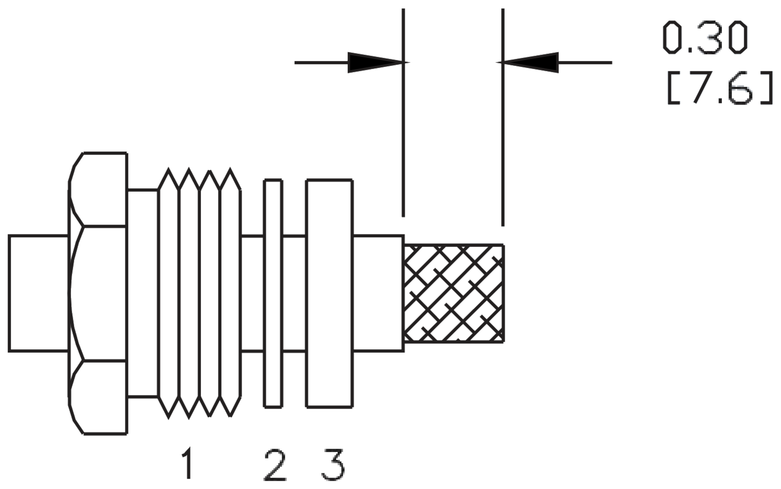

2. FORM BRAID OVER CLAMP NUT (4). TRIM BRAID BACK TO SHOULDER. CUT DIELECTRIC & CENTER CONDUCTOR TO DIMENSION SHOWN. DO NOT NICK CENTER CONDUCTOR. SOLDER CONTACT TO CENTER CONDUCTOR. REMOVE EXCESS SOLDER. DO NOT OVER HEAT DIELECTRIC. INSERT CABLE ASSEMBLY INTO BODY & TIGHTEN.

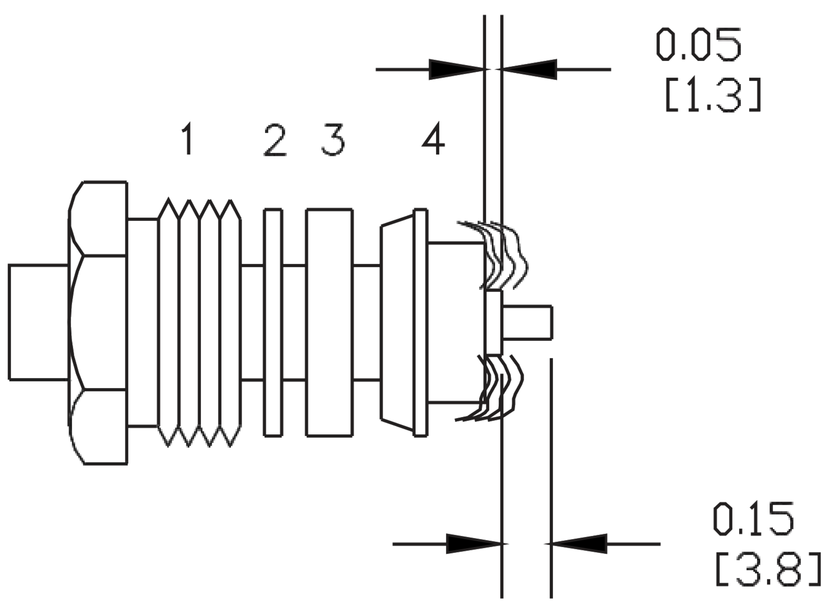

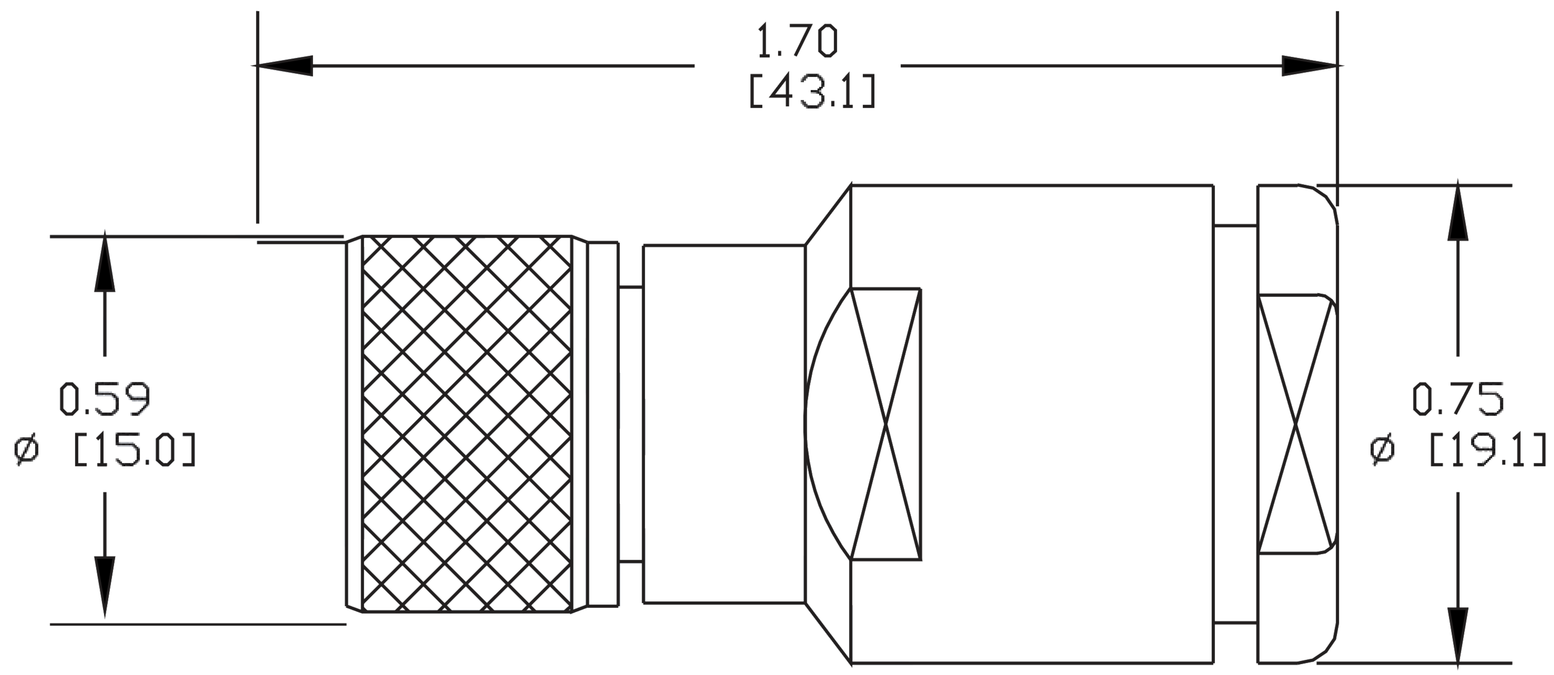

ebeestock
Ebeestock.com
8th Floor, Building 1, Yongfu Science
and Technology Center Industrial Park,
Nanzha District 5, Humen,523900, Dongguan, Guangdong, China.
Webstie: www.ebeestock.com **Email:** sales@ebeestock.com

DWG TITLE

ET11797

NOTES:
1. UNLESS OTHERWISE SPECIFIED ALL DIMENSIONS ARE NOMINAL.
2. ALL SPECIFICATIONS ARE SUBJECT TO CHANGE WITHOUT NOTICE AT ANY TIME.
3. DIMENSIONS ARE IN INCHES [mm].
4. FITS MIL-C-17 AND EQUIVALENT CABLES.

REV. A	FSCM NO. 53919	CAD FILE 052609	SCALE N/A	SIZE A	127