RP TNC Female Bulkhead Mount Connector Solder Attachment Sol der Cup Terminal, .410 inch D Hole

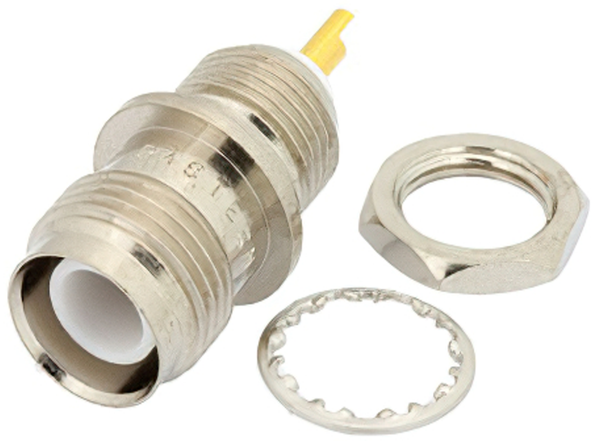

RF Connectors Technical Data Sheet ET11824

Configuration

- TNC Female Reverse Polarity Connector MIL-C-39012
- 50 Ohms
- Straight Body Geometry
- Solder Cup Interface Type
- Solder Attachment
- Bulkhead

Features

- Gold Plated Brass Contact
- Reverse Polarity
- 3 µin minimum contact plating

Applications

- General Purpose Test
- Rack and Panel Mount Applications

Description

Ebeestock's ET11824 RP TNC female bulkhead mount connector solder attachment solder cup terminal, .410 inch D hole is part of our full line of RF components available for same-day shipping. The female reverse polarity configuration uses a female connector body with a male inner contact pin. This TNC bulkhead connector allows designers to create external connections on their product enclosures, and can be used in a variety of other rack mount and panel mount applications.

Our reverse polarity TNC female bulkhead connector ET11824 datasheet specifications and drawing with dimensions are shown below in this PDF. Ebeestock's broad catalog of RF, microwave and millimeter wave connectors allows designers to configure and customize their signal connections however they like. Whether the need is to provide an I/O for a board design, or simply create a custom cable assembly configuration, Ebeestock has the right connector for the job. Ebeestock can also expertly build your custom cable connector assemblies for you and ship same-day.

Mechanical Specifications

Size	
Length	1.063 in [27 mm]
Width/Dia.	0.492 in [12.50 mm]
Weight	0.02 lbs [9.07 g]

Material Specifications

Description	Material	Plating
Contact	Brass	Gold 3 µin minimum
Insulation	PTFE	
Body	Brass	Nickel 70 µin minimum

Click the following link (or enter part number in "SEARCH" on website) to obtain additional part information including price, inventory and certifications: RP TNC Female Bulkhead Mount Connector Solder Attachment Solder Cup Terminal, .410 inch D Hole ET11824

8th Floor, Building 1, Yongfu Science and Technology Center Industrial Park,
Nanzha District 5, Humen,523900, Dongguan, Guangdong, China.

Webstie:www.ebeestock.com Email:sales@ebeestock.com

© 2022 Ebeestock Enterprises All Rights Reserved

RP TNC Female Bulkhead Mount Connector Solder Attachment Sol
der Cup Terminal, .410 inch D Hole

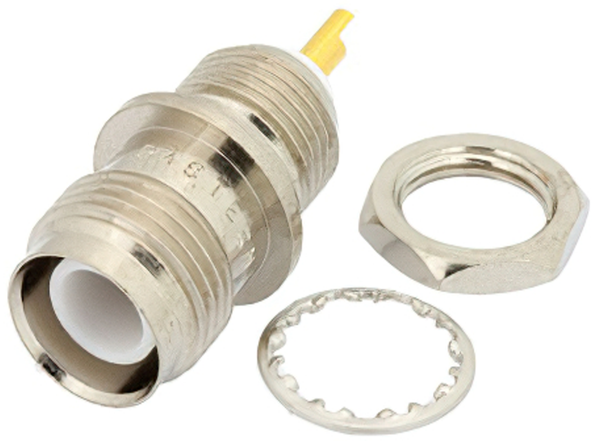

RF Connectors Technical Data Sheet ET11824

Compliance Certifications (see product page for current document)

Plotted and Other Data

Notes:

RP TNC Female Bulkhead Mount Connector Solder Attachment Solder Cup Terminal, .410 inch D Hole from Ebeestock Enterprises has same day shipment for domestic and International orders. Our RF, microwave and millimeter wave products maintain a 99% availability and are part of the broadest selection in the industry.

Click the following link (or enter part number in “SEARCH” on website) to obtain additional part information including price, inventory and certifications: RP TNC Female Bulkhead Mount Connector Solder Attachment Solder Cup Terminal, .410 inch D Hole ET11824

URL: https://www.ebeestock.com/rp-tnc-female-bulkhead-mount-connector-solder-attachment-solder-cup-terminal-410-inch-d-hole-0011824

The information contained in this document is accurate to the best of our knowledge and representative of the part described herein. It may be necessary to make modifications to the part and/or the documentation of the part, in order to implement improvements. Ebeestock reserves the right to make such changes as required. Unless otherwise stated, all specifications are nominal. Ebeestock does not make any representation or warranty regarding the suitability of the part described herein for any particular purpose, and Ebeestock does not assume any liability arising out of the use of any part or documentation.

8th Floor, Building 1, Yongfu Science and Technology Center Industrial Park,
Nanzha District 5, Humen,523900, Dongguan, Guangdong, China.

Webstie:www.ebeestock.com Email:sales@ebeestock.com

© 2022 Ebeestock Enterprises All Rights Reserved

© 2022 Ebeestock Enterprises All Rights Reserved

www.ebeestock.com

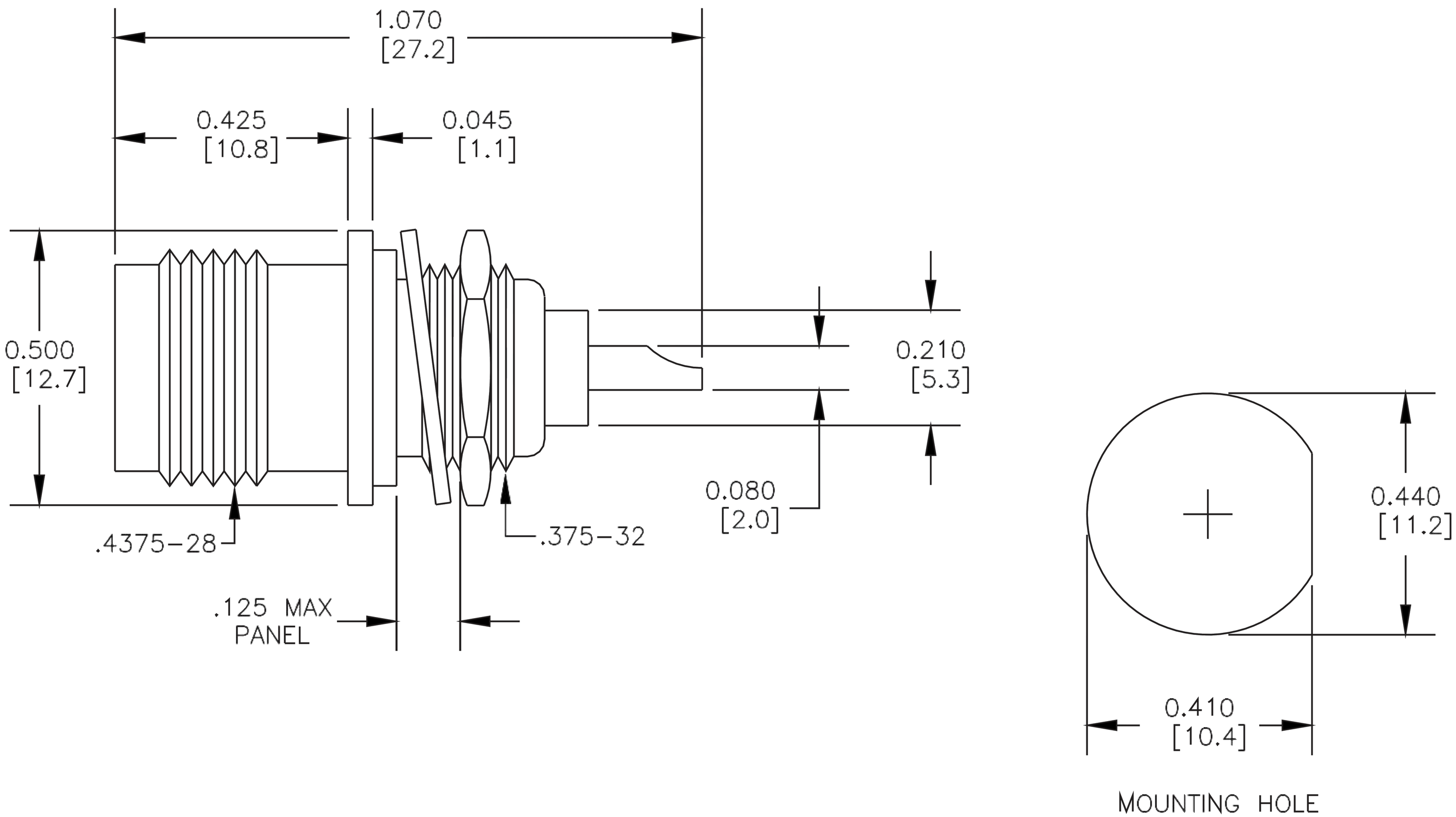

ebeestock
Ebeestock.com
8th Floor, Building 1, Yongfu Science
and Technology Center Industrial Park,
Nanzha District 5, Humen,523900, Dongguan, Guangdong, China.
Webstie: www.ebeestock.com **Email:** sales@ebeestock.com

DWG TITLE

ET11824

NOTES:
1. UNLESS OTHERWISE SPECIFIED ALL DIMENSIONS ARE NOMINAL.
2. ALL SPECIFICATIONS ARE SUBJECT TO CHANGE WITHOUT NOTICE AT ANY TIME.
3. DIMENSIONS ARE IN INCHES [mm].

FSCM NO. 53919	CAD FILE 060702	SCALE N/A	SIZE A	XXXX