1.85mm Male to 2.92mm Female Right Angle Adapter

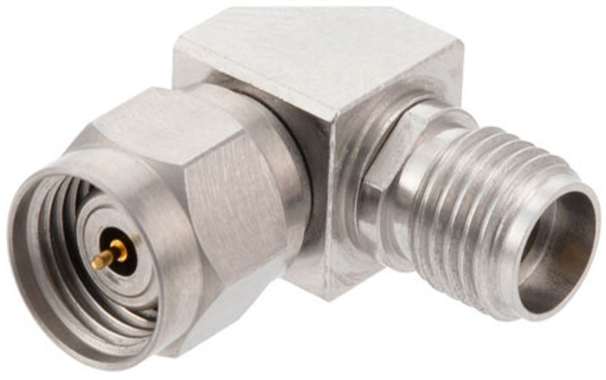

RF Adapters Technical Data Sheet

ET11885

Configuration

- 1.85mm Male Connector 1
- 2.92mm Female Connector 2
- 50 Ohm
- Right Angle Body Geometry

Features

- Max VSWR of 1.25:1 up to 40 GHz
- 4 µin over 20 µin contact plating
- Gold over Nickel Plated Beryllium Copper Contact

Applications

- Allows Connection Between Series
- General Purpose Test

Description

Ebeestock's ET11885 1.85mm male to 2.92mm female right angle adapter is part of our full line of RF components available for same-day shipping. The 1.85mm connector mates mechanically with commercially available 2.4mm connectors. The 2.92mm connector mates mechanically with commercially available SMA and 3.5mm connectors. Our 1.85mm to 2.92mm adapter has a male to female gender configuration built of durable stainless steel. ET11885 1.85mm male to 2.92mm female adapter operates to 40 GHz. The Ebeestock RF adapter provides excellent VSWR of 1.25:1 maximum. This right angle 1.85mm to 2.92mm adapter allows for easier connections in tight spaces.

RF adapters are often used to enable connections between two connector types that would otherwise not mate. Certain adapter configurations can also be used to protect connectors on expensive equipment where the number of connect/disconnect cycles is high. An RF, microwave or millimeter wave adapter is connected to the equipment, and the commonly changed connection is made with the adapter which can be easily replaced when it wears out after high usage; such adapters are referred to as connector savers. Ebeestock also offers bulkhead, panel mount, hermetically sealed, reverse polarity, and isolated ground adapter varieties to serve all of your RF, microwave and millimeter wave needs.

Electrical Specifications

Description	Minimum	Typical	Maximum	Units
Frequency Range	DC		40	GHz
VSWR			1.25:1	

Mechanical Specifications

Size

Description	Connector 1	Connector 2
Type	1.85mm Male	2.92mm Female
Polarity	Standard	Standard

Click the following link (or enter part number in "SEARCH" on website) to obtain additional part information including price, inventory and certifications: 1.85mm Male to 2.92mm Female Right Angle Adapter ET11885

8th Floor, Building 1, Yongfu Science and Technology Center Industrial Park,
Nanzha District 5, Humen,523900, Dongguan, Guangdong, China.

Webstie:www.ebeestock.com Email:sales@ebeestock.com

© 2022 Ebeestock Enterprises All Rights Reserved

1.85mm Male to 2.92mm Female Right Angle Adapter

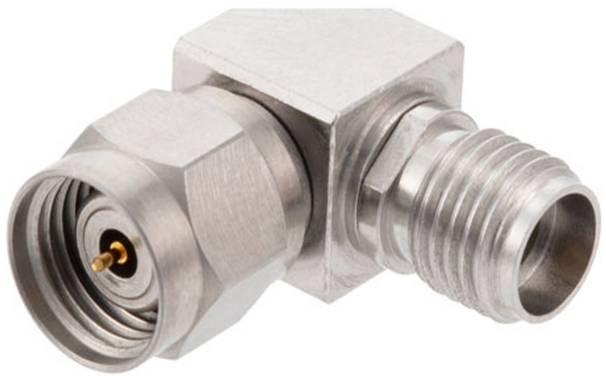

RF Adapters Technical Data Sheet ET11885

Material Specifications

Description	Connector 1 Material	Connector 1 Plating	Connector 2 Material	Connector 2 Plating
Type	1.85mm Male		2.92mm Female	
Contact	Beryllium Copper	Gold over Nickel 4 µin over 20 µin	Beryllium Copper	Gold over Nickel 4 µin over 20 µin
Outer Conductor			Passivated Stainless Steel	
Body	Passivated Stainless Steel		Passivated Stainless Steel	
Coupling Nut	Passivated Stainless Steel			

Compliance Certifications (see product page for current document)

1.85mm Male to 2.92mm Female Right Angle Adapter from Ebeestock Enterprises has same day shipment for domestic and International orders. Our RF, microwave and millimeter wave products maintain a 99.4% availability and are part of the broadest selection in the industry.

Click the following link (or enter part number in “SEARCH” on website) to obtain additional part information including price, inventory and certifications: 1.85mm Male to 2.92mm Female Right Angle Adapter ET11885

URL: https://www.ebeestock.com/1-85mm-male-to-2-92mm-female-right-angle-adapter-0011885

The information contained in this document is accurate to the best of our knowledge and representative of the part described herein. It may be necessary to make modifications to the part and/or the documentation of the part, in order to implement improvements. Ebeestock reserves the right to make such changes as required. Unless otherwise stated, all specifications are nominal. Ebeestock does not make any representation or warranty regarding the suitability of the part described herein for any particular purpose, and Ebeestock does not assume any liability arising out of the use of any part or documentation.

8th Floor, Building 1, Yongfu Science and Technology Center Industrial Park,
Nanzha District 5, Humen,523900, Dongguan, Guangdong, China.

Webstie:www.ebeestock.com Email:sales@ebeestock.com

© 2022 Ebeestock Enterprises All Rights Reserved

© 2022 Ebeestock Enterprises All Rights Reserved

www.ebeestock.com

REVISIONS			
REV.	DESCRIPTION	DATE	APPROVED
A	INITIAL RELEASE	1/4/2021	S.ELLIS

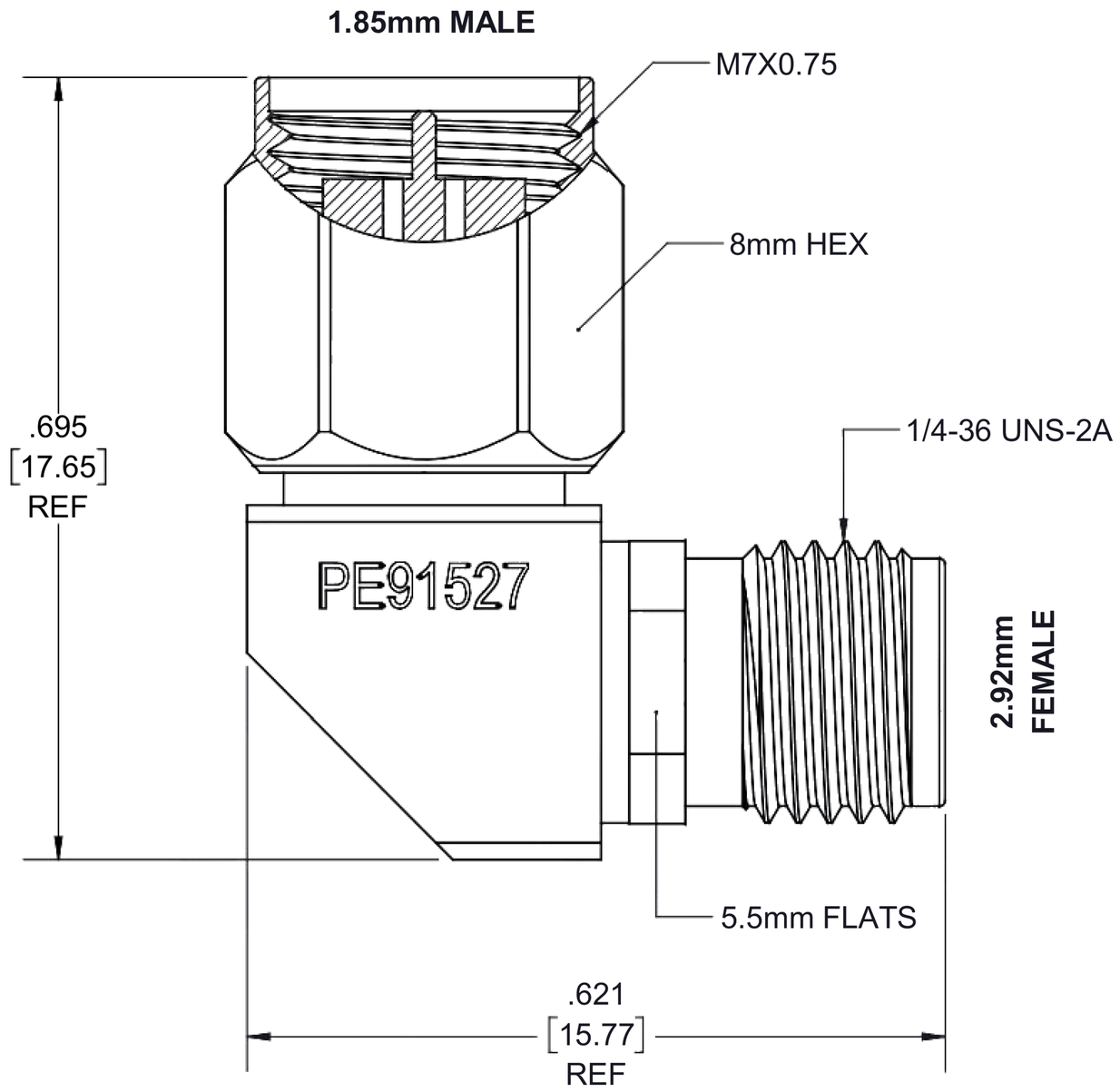

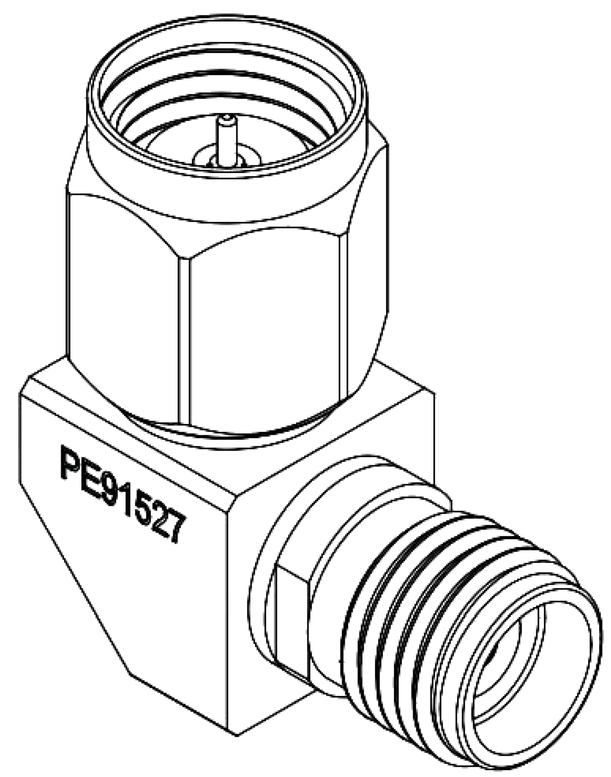

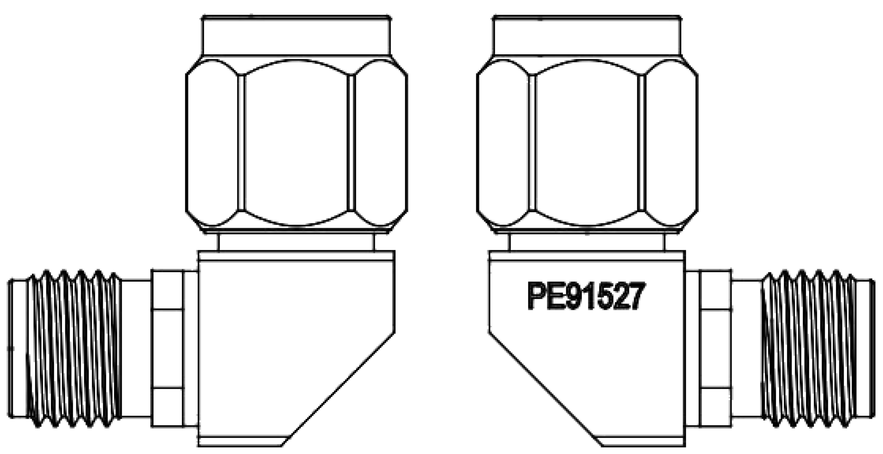

UNLESS OTHERWISE SPECIFIED
LEADING DIMENSIONS ARE INCHES
DIMENSIONS IN [ ] ARE MILLIMETERS

TOLERANCES:

.X = ±.2	[5.08]	FRACTIONS
.XX = ± .02	[.51]	± 1/32
.XXX = ±.005	[.13]	ANGLES ± 1°

CABLE LENGTH (L) TOLERANCES:

L ≤ 12 [305] = +1 [25] / -0
12 [305] < L ≤ 60 [1524] = +2 [51] / -0
60 [1524] < L ≤ 120 [3048] = +4 [102] / -0
120 [3048] < L ≤ 300 [7620] = +6 [152] / -0
300 [7620] < L = +5%L / -0

ALL DIMENSIONS SHOWN ARE FOR REFERENCE ONLY.

ebeestock
Ebeestock.com
8th Floor, Building 1, Yongfu Science and Technology Center Industrial Park,
Nanzha District 5, Humen,523900, Dongguan, Guangdong, China.
Webstie: www.ebeestock.com **Email:** sales@ebeestock.com

THIRD-ANGLE PROJECTION

THE INFORMATION AND DESIGN IN THIS DOCUMENT IS THE PROPERTY OF Ebeestock CORPORATION

ALL RIGHTS RESERVED.

SHEET 1 OF 1

SCALE N/A

SIZE	CAGE CODE	DRAWN BY	ITEM NO.	REV
A	53919	K.DANG	ET11885	A

THESE COMMODITIES, TECHNOLOGY OR SOFTWARE WERE EXPORTED FROM THE UNITED STATES IN ACCORDANCE WITH THE EXPORT ADMINISTRATION REGULATIONS. DIVERSION CONTRARY TO U.S. LAW PROHIBITED.