SMA Female to 1.85mm Male Adapter

RF Adapters Technical Data Sheet

ET11906

Configuration

- SMA Female Connector 1
- 1.85mm Male Connector 2
- 50 Ohm
- Straight Body Geometry

Features

- Max VSWR of 1.3:1 up to 18 GHz
- SMA interface compliant with MIL-STD-348
- Gold Plated Beryllium Copper Contact
- Max VSWR of 1.3:1 up to 18 GHz
- SMA Interface compliant with MIL-STD-348
- Gold Plated Beryllium Copper Contact

Applications

- Allows Connection Between Series
- General Purpose Test
- Allows Connection Between Series
- General Purpose Test

Description

Ebeestock's ET11906 SMA female to 1.85mm male adapter is part of our full line of RF components available for same-day shipping. The SMA connector mates mechanically with commercially available 3.5mm and 2.92mm (K) connectors. The 1.85mm connector mates mechanically with commercially available 2.4mm connectors. Our SMA to 1.85mm adapter has a female to male gender configuration. ET11906 SMAfemale to 1.85mm male adapter operates to 18 GHz. The Ebeestock RF adapter provides good VSWR of 1.3:1 maximum.

RF adapters are often used to enable connections between two connector types that would otherwise not mate. Certain adapter configurations can also be used to protect connectors on expensive equipment where the number of connect/disconnect cycles is high. An RF, microwave or millimeter wave adapter is connected to the equipment, and the commonly changed connection is made with the adapter which can be easily replaced when it wears out after high usage; such adapters are referred to as connector savers. Ebeestock also offers bulkhead, panel mount, hermetically sealed, reverse polarity, and isolated ground adapter varieties to serve all of your RF, microwave and millimeter wave needs.

Electrical Specifications

Frequency Range	DC	18	GHz
VSWR		1.3:1	

Mechanical Specifications

Size

Length	0.844 in [21.44 mm]
Width	0.312 in [7.92 mm]
Weight	0.013 lbs [5.9 g]

Click the following link (or enter part number in "SEARCH" on website) to obtain additional part information including price, inventory and certifications: SMA Female to 1.85mm Male Adapter ET11906

8th Floor, Building 1, Yongfu Science and Technology Center Industrial Park,
Nanzha District 5, Humen,523900, Dongguan, Guangdong, China.

Webstie:www.ebeestock.com Email:sales@ebeestock.com

© 2022 Ebeestock Enterprises All Rights Reserved

SMA Female to 1.85mm Male Adapter

RF Adapters Technical Data Sheet ET11906

Description	Connector 1	Connector 2
Type	SMA Female	1.85mm Male
Polarity	Standard	Standard
Interface Specification	MIL-STD-348	
Hex Size		5/16 in.
Mating Torque		8 to 10 in-lbs 0.90 to 1.13 Nm

Material Specifications

Description	Connector 1 Material	Connector 1 Plating	Connector 2 Material	Connector 2 Plating
Type	SMA Female		1.85mm Male	
Contact	Beryllium Copper	Gold	Beryllium Copper	Gold
Outer Conductor	Passivated Stainless Steel			
Body			Passivated Stainless Steel	
Coupling Nut			Passivated Stainless Steel	

Environmental Specifications

Temperature

Operating Range -65 to +125 ºC

Compliance Certifications (see product page for current document)

Plotted and Other Data

Notes:

Click the following link (or enter part number in “SEARCH” on website) to obtain additional part information including price, inventory and certifications: SMA Female to 1.85mm Male Adapter ET11906

8th Floor, Building 1, Yongfu Science and Technology Center Industrial Park,
Nanzha District 5, Humen,523900, Dongguan, Guangdong, China.

Webstie:www.ebeestock.com Email:sales@ebeestock.com

© 2022 Ebeestock Enterprises All Rights Reserved

SMA Female to 1.85mm Male Adapter

RF Adapters Technical Data Sheet ET11906

SMA Female to 1.85mm Male Adapter from Ebeestock Enterprises has same day shipment for domestic and International orders. Our RF, microwave and millimeter wave products maintain a 99.4% availability and are part of the broadest selection in the industry.

Click the following link (or enter part number in “SEARCH” on website) to obtain additional part information including price, inventory and certifications: SMA Female to 1.85mm Male Adapter ET11906

URL: https://www.ebeestock.com/sma-female-to-1-85mm-male-adapter-0011906

The information contained in this document is accurate to the best of our knowledge and representative of the part described herein. It may be necessary to make modifications to the part and/or the documentation of the part, in order to implement improvements. Ebeestock reserves the right to make such changes as required. Unless otherwise stated, all specifications are nominal. Ebeestock does not make any representation or warranty regarding the suitability of the part described herein for any particular purpose, and Ebeestock does not assume any liability arising out of the use of any part or documentation.

8th Floor, Building 1, Yongfu Science and Technology Center Industrial Park,
Nanzha District 5, Humen,523900, Dongguan, Guangdong, China.

Webstie:www.ebeestock.com Email:sales@ebeestock.com

© 2022 Ebeestock Enterprises All Rights Reserved

© 2022 Ebeestock Enterprises All Rights Reserved

www.ebeestock.com

REVISIONS			
REV.	DESCRIPTION	DATE	APPROVED
A	PCR ET11906	12/30/2021	A. GANWANI

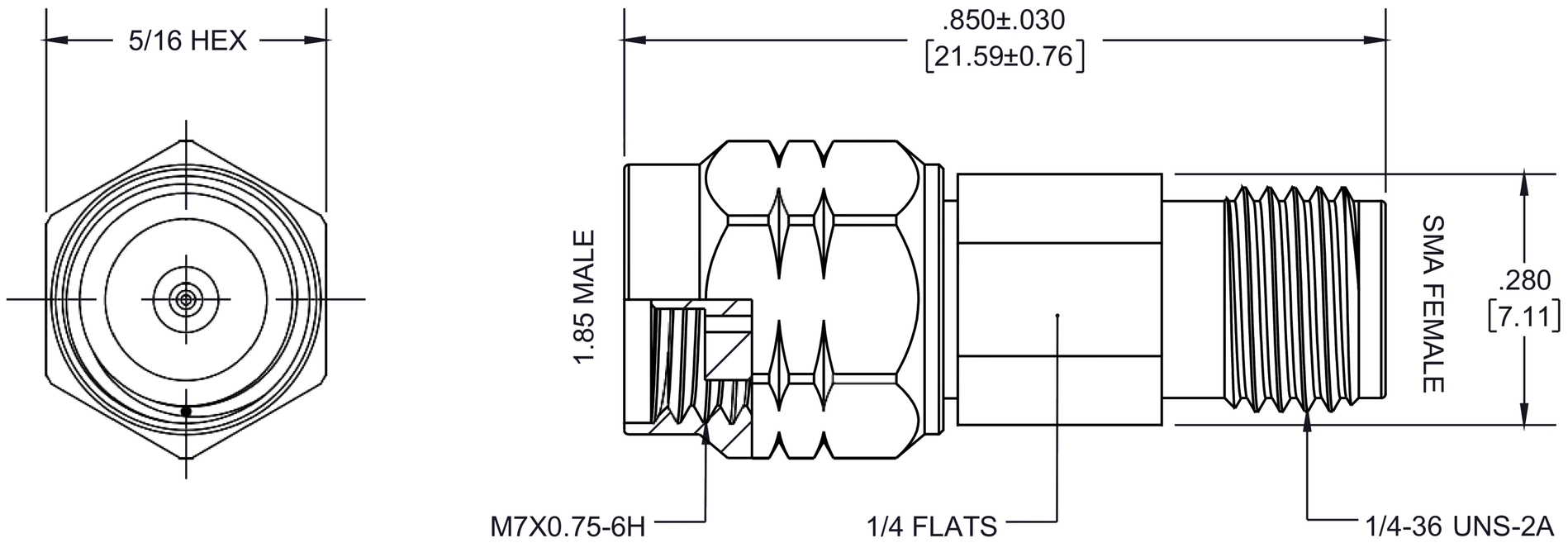

UNLESS OTHERWISE SPECIFIED
LEADING DIMENSIONS ARE INCHES
DIMENSIONS IN [ ] ARE MILLIMETERS

TOLERANCES:

.X = ±.2 [5.08]
.XX = ± .02 [.51]
.XXX = ±.005 [.13]

FRACTIONS
± 1/32
ANGLES ± 1°

CABLE LENGTH (L) TOLERANCES:

L ≤ 12 [305] = +1 [25] / -0
12 [305] < L ≤ 60 [1524] = +2 [51] / -0
60 [1524] < L ≤ 120 [3048] = +4 [102] / -0
120 [3048] < L ≤ 300 [7620] = +6 [152] / -0
300 [7620] < L = +5%L / -0

ALL DIMENSIONS SHOWN
ARE FOR REFERENCE ONLY.

ebeestock
Ebeestock.com
8th Floor, Building 1, Yongfu Science
and Technology Center Industrial Park,
Nanzha District 5, Humen,523900, Dongguan, Guangdong, China.
Webstie: www.ebeestock.com **Email:** sales@ebeestock.com

THIRD-ANGLE PROJECTION

THE INFORMATION AND
DESIGN IN THIS DOCUMENT
IS THE PROPERTY OF
Ebeestock CORPORATION

ALL RIGHTS RESERVED.

SHEET 1 OF 1

SCALE N/A

SIZE	CAGE CODE	DRAWN BY	ITEM NO.	REV
A	53919	K.DANG	ET11906	A

THESE COMMODITIES, TECHNOLOGY OR SOFTWARE WERE EXPORTED FROM THE UNITED STATES IN ACCORDANCE
WITH THE EXPORT ADMINISTRATION REGULATIONS. DIVERSION CONTRARY TO U.S. LAW PROHIBITED.