2.4mm Male to 2.92mm Female Right Angle Adapter

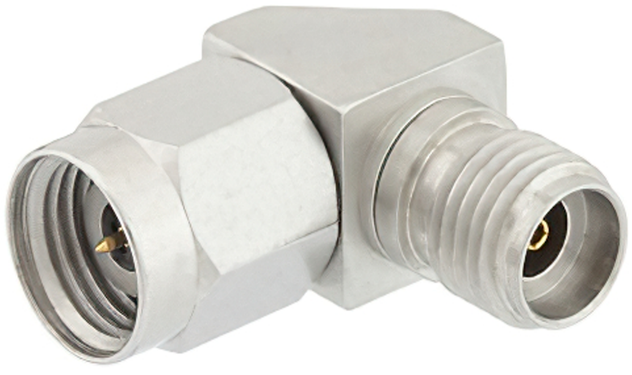

RF Adapters Technical Data Sheet

ET11920

Configuration

- 2.4mm Male Connector 1
- 2.92mm Female Connector 2
- 50 Ohms
- Right Angle Body Geometry

Features

- Max VSWR of 1.3:1 up to 40 GHz
- Gold over Nickel Plated Beryllium Copper Contact
- Contact Plating per MIL-G-45204

Applications

- Allows Connection Between Series
- General Purpose Test

Description

Ebeestock's ET11920 2.4mm male to 2.92mm female right angle adapter is part of our full line of RF components available for same-day shipping. The 2.4mm connector mates mechanically with commercially available 1.85mm (V) connectors. Our 2.4mm to 2.92mm adapter has a male to female gender configuration. ET11920 2.4mm male to 2.92mm female adapter operates to 40 GHz. The Ebeestock RF adapter provides good VSWR of 1.3:1 maximum. This low profile right angle 2.4mm to 2.92mm adapter allows for easier connections in tight spaces.

RF adapters are often used to enable connections between two connector types that would otherwise not mate. Certain adapter configurations can also be used to protect connectors on expensive equipment where the number of connect/disconnect cycles is high. An RF, microwave or millimeter wave adapter is connected to the equipment, and the commonly changed connection is made with the adapter which can be easily replaced when it wears out after high usage; such adapters are referred to as connector savers. Ebeestock also offers bulkhead, panel mount, hermetically sealed, reverse polarity, and isolated ground adapter varieties to serve all of your RF, microwave and millimeter wave needs.

Electrical Specifications

Description	Minimum	Typical	Maximum	Units
Frequency Range	DC		40	GHz
VSWR			1.3:1	
Insertion Loss			0.32	dB

Electrical Specification Notes:
Values at 25°C, sea level.
Insertion Loss (dB) = 0.05*sqrt(fGHz).

Mechanical Specifications

Size

Length	0.47 in [11.94 mm]
Width	0.532 in [13.51 mm]
Height	0.532 in [13.51 mm]
Weight	0.06 lbs [27.22 g]

Click the following link (or enter part number in "SEARCH" on website) to obtain additional part information including price, inventory and certifications: 2.4mm Male to 2.92mm Female Right Angle Adapter ET11920

8th Floor, Building 1, Yongfu Science and Technology Center Industrial Park,
Nanzha District 5, Humen,523900, Dongguan, Guangdong, China.

Webstie:www.ebeestock.com Email:sales@ebeestock.com

© 2022 Ebeestock Enterprises All Rights Reserved

2.4mm Male to 2.92mm Female Right Angle Adapter

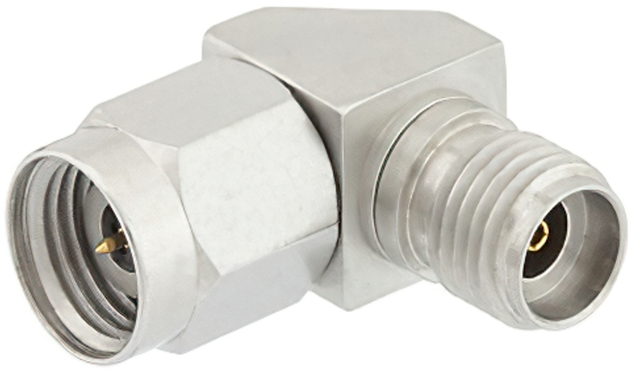

RF Adapters Technical Data Sheet

ET11920

Description	Connector 1	Connector 2
Type	2.4mm Male	2.92mm Female
Polarity	Standard	Standard
Mating Cycles	500	500
Hex Size	5/16 in.	
Mating Torque	8 to 10 in-lbs [0.90 to 1.13 Nm]	

Material Specifications

Description	Connector 1 Material	Connector 1 Plating	Connector 2 Material	Connector 2 Plating
Type	2.4mm Male		2.92mm Female	
Contact	Beryllium Copper	Gold over Nickel MIL-G-45204	Beryllium Copper	Gold over Nickel MIL-G-45204
Insulation	Oxide-Noryl		Oxide-Noryl	
Outer Conductor	Passivated Stainless Steel	ASTM A380		
Body	Passivated Stainless Steel	ASTM A380		
Coupling Nut	Passivated Stainless Steel	ASTM A380		

Environmental Specifications

Temperature

Operating Range	-55 to +100 deg C
Vibration	MIL-STD-202, Method 204, Cond. D (20G's)
Salt Spray	MIL-STD-202, Method 101, Cond. B, 5% salt solution

Compliance Certifications (see product page for current document)

Plotted and Other Data

Notes:

Click the following link (or enter part number in "SEARCH" on website) to obtain additional part information including price, inventory and certifications: 2.4mm Male to 2.92mm Female Right Angle Adapter ET11920

8th Floor, Building 1, Yongfu Science and Technology Center Industrial Park,
Nanzha District 5, Humen,523900, Dongguan, Guangdong, China.

Webstie:www.ebeestock.com Email:sales@ebeestock.com

© 2022 Ebeestock Enterprises All Rights Reserved

2.4mm Male to 2.92mm Female Right Angle Adapter

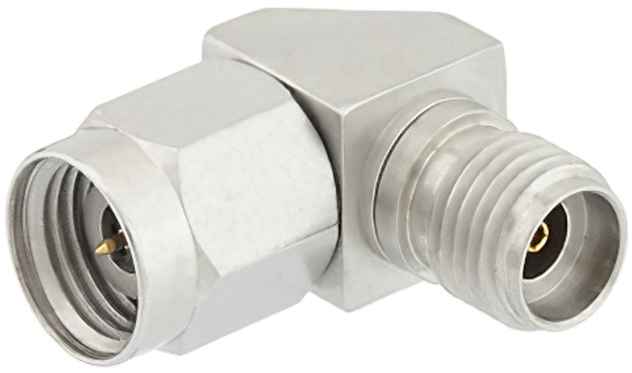

RF Adapters Technical Data Sheet ET11920

2.4mm Male to 2.92mm Female Right Angle Adapter from Ebeestock Enterprises has same day shipment for domestic and International orders. Our RF, microwave and millimeter wave products maintain a 99% availability and are part of the broadest selection in the industry.

Click the following link (or enter part number in “SEARCH” on website) to obtain additional part information including price, inventory and certifications: 2.4mm Male to 2.92mm Female Right Angle Adapter ET11920

URL: https://www.ebeestock.com/2-4mm-male-to-2-92mm-female-right-angle-adapter-0011920

The information contained in this document is accurate to the best of our knowledge and representative of the part described herein. It may be necessary to make modifications to the part and/or the documentation of the part, in order to implement improvements. Ebeestock reserves the right to make such changes as required. Unless otherwise stated, all specifications are nominal. Ebeestock does not make any representation or warranty regarding the suitability of the part described herein for any particular purpose, and Ebeestock does not assume any liability arising out of the use of any part or documentation.

8th Floor, Building 1, Yongfu Science and Technology Center Industrial Park,
Nanzha District 5, Humen,523900, Dongguan, Guangdong, China.

Webstie:www.ebeestock.com Email:sales@ebeestock.com

© 2022 Ebeestock Enterprises All Rights Reserved

ET11920 CAD Drawing

2.4mm Male to 2.92mm Female Right Angle Adapter

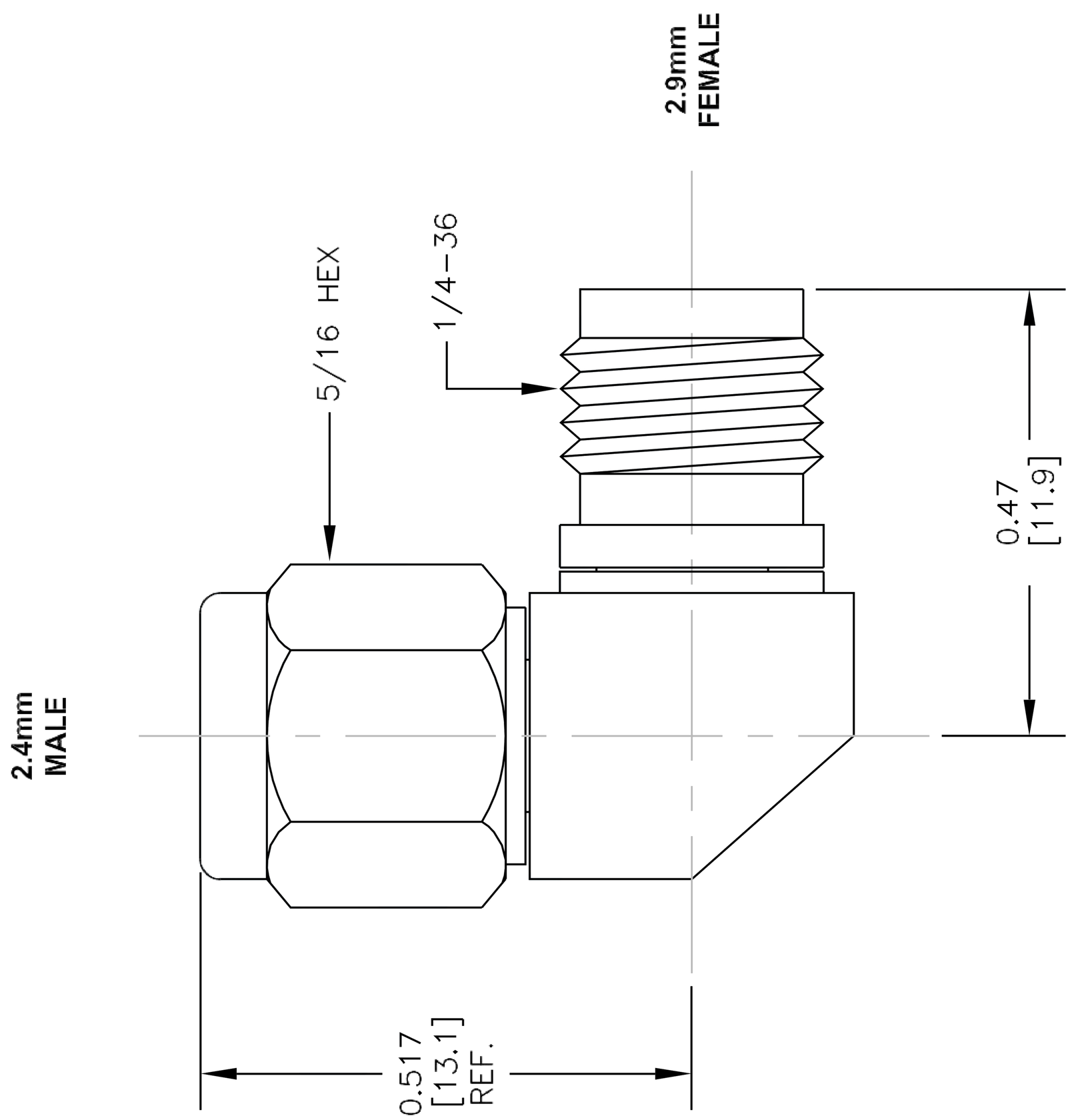

NOTES:
1. UNLESS OTHERWISE SPECIFIED ALL DIMENSIONS ARE NOMINAL.
2. ALL SPECIFICATIONS ARE SUBJECT TO CHANGE WITHOUT NOTICE AT ANY TIME.
3. DIMENSIONS ARE IN INCHES [mm].

CAD FILE	010814	SCALE N/A	SIZE A	150

DWG TITLE

ET11920

FSCM NO. 53919

ebeestock
Ebeestock.com
8th Floor, Building 1, Yongfu Science
and Technology Center Industrial Park,
Nanzha District 5, Humen,523900, Dongguan, Guangdong, China.
Webstie: www.ebeestock.com Email: sales@ebeestock.com

© 2022 Ebeestock Enterprises All Rights Reserved