3.5mm NMD Female to 2.4mm Female Adapter

TECHNICAL DATA SHEET ET11940

Configuration

Connector 1	3.5mm NMD Female
Impedance 1	50 Ohms
Connector 2	2.4mm Female
Impedance 2	50 Ohms
Adapter Design	Ruggedized
Body Style	Straight

Electrical Specifications

Frequency Range	DC to 33 GHz
Maximum VSWR	1.25:1
Frequency 1	
Frequency, GHz	DC to 4
VSWR	1.05:1
Frequency 2	
Frequency, GHz	4 to 18
VSWR	1.1:1
Frequency 3	
Frequency, GHz	18 to 22
VSWR	1.2:1
Frequency 4	
Frequency, GHz	22 to 33
VSWR	1.25:1

Mechanical Specifications

Size	
Length, in [mm]	1.4 [35.56]
Width/Dia., in [mm]	0.86 [21.84]
Connector 1	
Type	3.5mm NMD Female
Inner Conductor Material and Plating	Beryllium Copper, Gold
Outer Conductor Material and Plating	Passivated Stainless Steel
Coupling Nut Material and Plating	Passivated Stainless Steel
Body Material and Plating	Passivated Stainless Steel
Dielectric Type	PSU
Connector 2	
Type	2.4mm Female
Inner Conductor Material and Plating	Beryllium Copper, Gold
Outer Conductor Material and Plating	Passivated Stainless Steel
Body Material and Plating	Passivated Stainless Steel

Click the following link (or enter part number in “SEARCH” on website) to obtain additional part information including price, inventory and certifications: Ruggedized 3.5mm NMD Female to 2.4mm Female Adapter ET11940

8th Floor, Building 1, Yongfu Science and Technology Center Industrial Park,
Nanzha District 5, Humen,523900, Dongguan, Guangdong, China.

Webstie:www.ebeestock.com Email:sales@ebeestock.com

© 2022 Ebeestock Enterprises All Rights Reserved

3.5mm NMD Female to 2.4mm Female Adapter

TECHNICAL DATA SHEET ET11940

Dielectric Type	PSU

Environmental Specifications

Compliance Certifications (visit for current document) RoHS Compliant

Plotted and Other Data

Notes:

- Values at +25 °C, sea level

Ruggedized 3.5mm NMD Female to 2.4mm Female Adapter from Ebeestock Enterprises has same day shipment for domestic and International orders. Our RF, microwave and millimeter wave products maintain a 99% availability and are part of the broadest selection in the industry.

Click the following link (or enter part number in “SEARCH” on website) to obtain additional part information including price, inventory and certifications: Ruggedized 3.5mm NMD Female to 2.4mm Female Adapter ET11940

URL: https://www.ebeestock.com/3-5mm-nmd-female-to-2-4mm-female-adapter-0011940

The information contained in this document is accurate to the best of our knowledge and representative of the part described herein. It may be necessary to make modifications to the part and/or the documentation of the part, in order to implement improvements. Ebeestock reserves the right to make such changes as required. Unless otherwise stated, all specifications are nominal. Ebeestock does not make any representation or warranty regarding the suitability of the part described herein for any particular purpose, and Ebeestock does not assume any liability arising out of the use of any part or documentation.

8th Floor, Building 1, Yongfu Science and Technology Center Industrial Park,
Nanzha District 5, Humen,523900, Dongguan, Guangdong, China.

Webstie:www.ebeestock.com Email:sales@ebeestock.com

© 2022 Ebeestock Enterprises All Rights Reserved

ET11940 CAD Drawing

Ruggedized 3.5mm NMD Female to 2.4mm Female Adapter

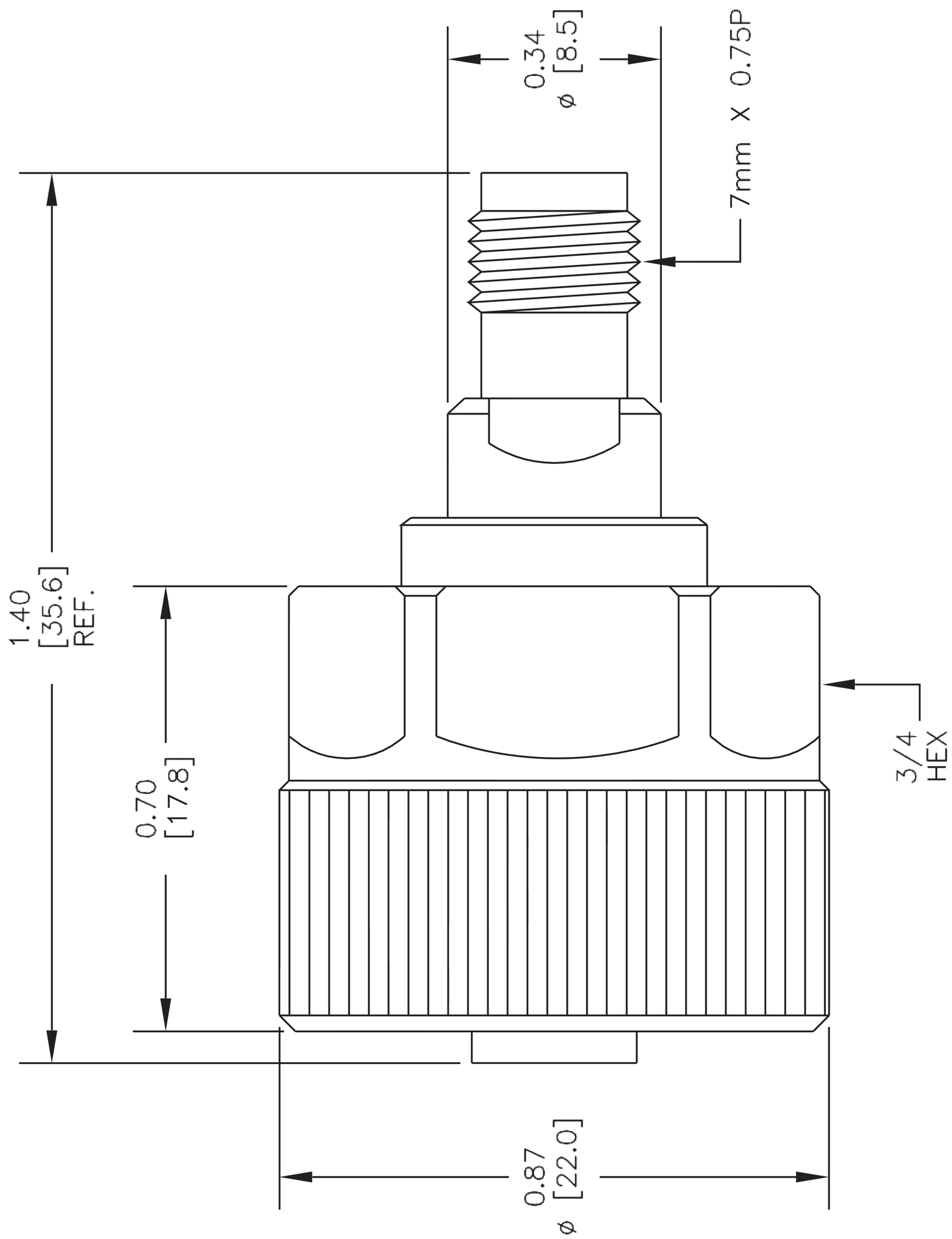

2.4 mm
FEMALE

Ruggedized NMD
3.5mm
FEMALE

NOTES:
1. UNLESS OTHERWISE SPECIFIED ALL DIMENSIONS ARE NOMINAL.
2. ALL SPECIFICATIONS ARE SUBJECT TO CHANGE WITHOUT NOTICE AT ANY TIME.
3. DIMENSIONS ARE IN INCHES [mm].

DWG TITLE
ET11940

FSCM NO. 53919

CAD FILE 020414

SCALE N/A

SIZE A

150

ebeestock
Ebeestock.com
8th Floor, Building 1, Yongfu Science
and Technology Center Industrial Park,
Nanzha District 5, Humen,523900, Dongguan, Guangdong, China.
Webstie: www.ebeestock.com Email: sales@ebeestock.com

© 2022 Ebeestock Enterprises All Rights Reserved