3.5mm NMD Female to 2.92mm Female Adapter

RF Adapters Technical Data Sheet

ET11994

Configuration

- 3.5mm NMD Female Connector 1
- 2.92mm Female Connector 2
- 50 Ohm
- Straight Body Geometry

Features

- Max VSWR of 1.25:1 up to 34.5 GHz
- 4 µin minimum contact plating
- Gold Plated Beryllium Copper Contact
- 30 µin min Gold Contact Plating

Applications

- Allows Connection Between Series
- General Purpose Test

Description

Ebeestock's ET11994 3.5mm NMD female to 2.92mm female adapter is part of our full line of RF components available for same-day shipping. Our 3.5mm NMD to 2.92mm adapter has a female to female gender configuration built of durable stainless steel. ET11994 3.5mm NMD female to 2.92mm female adapter operates to 34.5 GHz. The Ebeestock RF adapter provides excellent VSWR of 1.25:1 maximum.

RF adapters are often used to enable connections between two connector types that would otherwise not mate. Certain adapter configurations can also be used to protect connectors on expensive equipment where the number of connect/disconnect cycles is high. An RF, microwave or millimeter wave adapter is connected to the equipment, and the commonly changed connection is made with the adapter which can be easily replaced when it wears out after high usage; such adapters are referred to as connector savers. Ebeestock also offers bulkhead, panel mount, hermetically sealed, reverse polarity, and isolated ground adapter varieties to serve all of your RF, microwave and millimeter wave needs.

Electrical Specifications

Frequency Range	DC	34.5	GHz
VSWR		1.25:1	
Operating Voltage (AC)		500	Vrms

Mechanical Specifications

Size

Length	1.33 in [33.78 mm]
Width	0.87 in [22.1 mm]
Height	0.87 in [22.1 mm]

Type	3.5mm NMD Female	2.92mm Female
Polarity	Standard	Standard

Click the following link (or enter part number in "SEARCH" on website) to obtain additional part information including price, inventory and certifications: 3.5mm NMD Female to 2.92mm Female Adapter ET11994

8th Floor, Building 1, Yongfu Science and Technology Center Industrial Park,
Nanzha District 5, Humen,523900, Dongguan, Guangdong, China.

Webstie:www.ebeestock.com Email:sales@ebeestock.com

© 2022 Ebeestock Enterprises All Rights Reserved

3.5mm NMD Female to 2.92mm Female Adapter

RF Adapters Technical Data Sheet ET11994

Material Specifications

Description	Connector 1 Material	Connector 1 Plating	Connector 2 Material	Connector 2 Plating
Type	3.5mm NMD Female		2.92mm Female	
Contact	Beryllium Copper	Gold 4 µin minimum	Beryllium Copper	Gold 4 µin minimum
Body	Stainless Steel	Passivated Stainless Steel 100 µin minimum	Stainless Steel	Passivated Stainless Steel 100 µin minimum

Environmental Specifications

Temperature

Operating Range -65 to +165 ºC

Compliance Certifications (see product page for current document)

Plotted and Other Data

Notes:

3.5mm NMD Female to 2.92mm Female Adapter from Ebeestock Enterprises has same day shipment for domestic and International orders. Our RF, microwave and millimeter wave products maintain a 99.4% availability and are part of the broadest selection in the industry.

Click the following link (or enter part number in “SEARCH” on website) to obtain additional part information including price, inventory and certifications: 3.5mm NMD Female to 2.92mm Female Adapter ET11994

URL: https://www.ebeestock.com/3-5mm-nmd-female-to-2-92mm-female-adapter-0011994

The information contained in this document is accurate to the best of our knowledge and representative of the part described herein. It may be necessary to make modifications to the part and/or the documentation of the part, in order to implement improvements. Ebeestock reserves the right to make such changes as required. Unless otherwise stated, all specifications are nominal. Ebeestock does not make any representation or warranty regarding the suitability of the part described herein for any particular purpose, and Ebeestock does not assume any liability arising out of the use of any part or documentation.

8th Floor, Building 1, Yongfu Science and Technology Center Industrial Park,
Nanzha District 5, Humen,523900, Dongguan, Guangdong, China.

Webstie:www.ebeestock.com Email:sales@ebeestock.com

© 2022 Ebeestock Enterprises All Rights Reserved

© 2022 Ebeestock Enterprises All Rights Reserved

www.ebeestock.com

REVISIONS			
REV.	DESCRIPTION	DATE	APPROVED
A	INITIAL RELEASE	8/17/2021	BWOODS

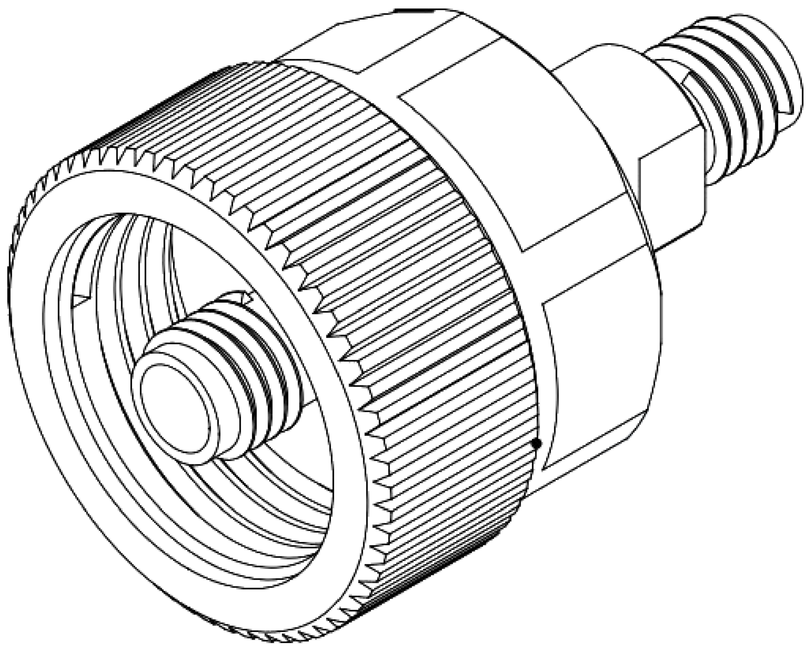

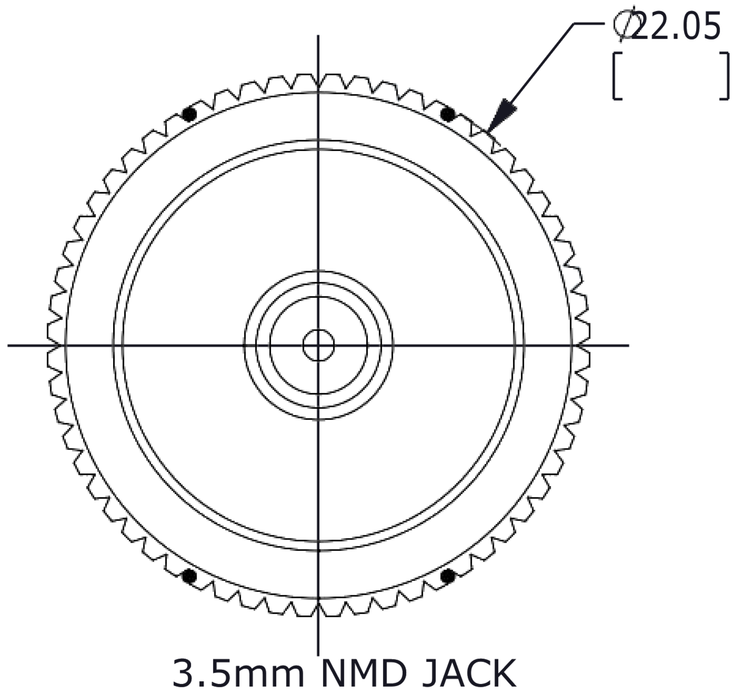

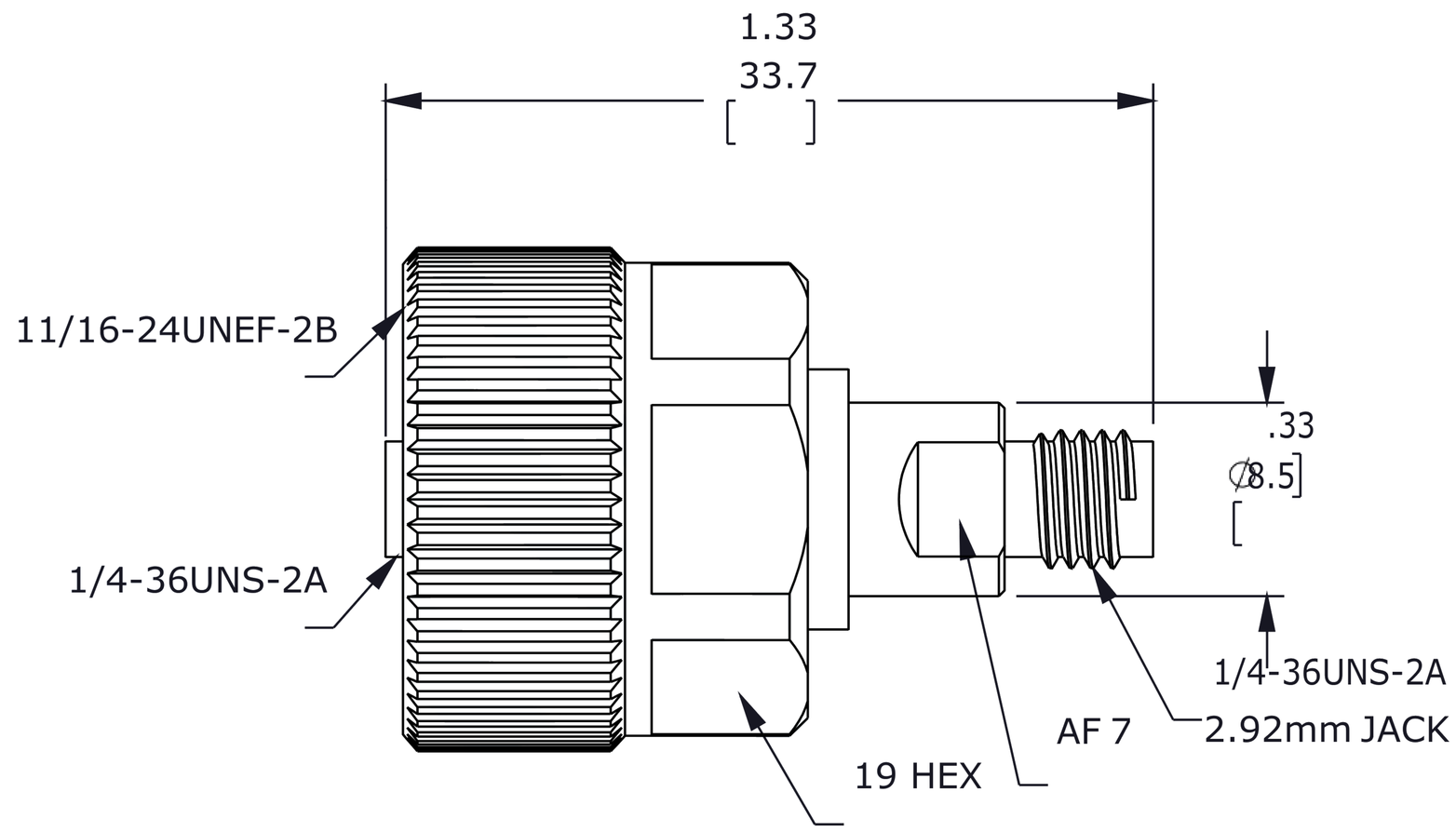

UNLESS OTHERWISE SPECIFIED
LEADING DIMENSIONS ARE INCHES
DIMENSIONS IN [ ] ARE MILLIMETERS

TOLERANCES:

.X = ± .2 [5.08] FRACTIONS
.XX = ± .02 [.51] ± 1/32
.XXX = ±.005 [.13] ANGLES ± 1°

CABLE LENGTH (L) TOLERANCES:

L ≤ 12 [305] = +1 [25] / -0
12 [305] < L ≤ 60 [1524] = +2 [51] / -0
60 [1524] < L ≤ 120 [3048] = +4 [102] / -0
120 [3048] < L ≤ 300 [7620] = +6 [152] / -0
300 [7620] < L = +5%L / -0

ALL DIMENSIONS SHOWN
ARE FOR REFERENCE ONLY.

ebeestock
Ebeestock.com
8th Floor, Building 1, Yongfu Science
and Technology Center Industrial Park,
Nanzha District 5, Humen,523900, Dongguan, Guangdong, China.
Webstie: www.ebeestock.com Email: sales@ebeestock.com

THIRD-ANGLE PROJECTION

THE INFORMATION AND
DESIGN IN THIS DOCUMENT
IS THE PROPERTY OF
Ebeestock CORPORATION ALL
RIGHTS RESERVED.

SHEET 1 OF 1

SCALE N/A

THESE COMMODITIES, TECHNOLOGY OR SOFTWARE WERE EXPORTED FROM THE UNITED STATES IN ACCORDANCE WITH THE EXPORT ADMINISTRATION REGULATIONS. DIVERSION CONTRARY TO U.S. LAW PROHIBITED.

SIZE	CAGE CODE	DRAWN BY	ITEM NO.	REV
A	53919	DMAY	ET1199 4	A

T-Rev.D