Low PIM 7/16 DIN Female to 4.3-10 Female Adapter

RF Adapters Technical Data Sheet

ET12055

Configuration

- 7/16 DIN Female Connector 1
- 4.3-10 Female Connector 2
- 50 Ohm

Features

- Max VSWR of 1.25:1 up to 6 GHz
- PIM levels lower than -163 dBc
- Low PIM Design
- Straight Body Geometry
- Silver Plated Beryllium Copper Contact

Applications

- Allows Connection Between Series
- General Purpose Test
- Low PIM Applications
- Mobile Communications Systems
- Base Stations
- Distributed Antenna Systems (DAS)
- Small Cells
- Feeder Cables

Description

Ebeestock's ET12055 7/16 DIN female to 4.3-10 female adapter is part of our full line of RF components available for same-day shipping. Our 7/16 DIN to 4.3-10 adapter has a female to female gender configuration in a low PIM design. ET12055 7/16 DIN female to 4.3-10 female adapter operates to 6 GHz. The Ebeestock RF adapter provides excellent VSWR of 1.25:1 maximum and passive intermodulation of -163 dBc maximum.

RF adapters are often used to enable connections between two connector types that would otherwise not mate. Certain adapter configurations can also be used to protect connectors on expensive equipment where the number of connect/disconnect cycles is high. An RF, microwave or millimeter wave adapter is connected to the equipment, and the commonly changed connection is made with the adapter which can be easily replaced when it wears out after high usage; such adapters are referred to as connector savers. Ebeestock also offers bulkhead, panel mount, hermetically sealed, reverse polarity, and isolated ground adapter varieties to serve all of your RF, microwave and millimeter wave needs.

Electrical Specifications

Description	Minimum	Typical	Maximum	Units
Frequency Range	DC		6	GHz
VSWR			1.25:1	
Passive Intermodulation			-163	dBc
Insulation Resistance	5,000			MOhms

Electrical Specification Notes:
Values at 25° C, sea level.

Click the following link (or enter part number in "SEARCH" on website) to obtain additional part information including price, inventory and certifications: Low PIM 7/16 DIN Female to 4.3-10 Female Adapter ET12055

8th Floor, Building 1, Yongfu Science and Technology Center Industrial Park,
Nanzha District 5, Humen,523900, Dongguan, Guangdong, China.

Webstie:www.ebeestock.com Email:sales@ebeestock.com

© 2022 Ebeestock Enterprises All Rights Reserved

Low PIM 7/16 DIN Female to 4.3-10 Female Adapter

RF Adapters Technical Data Sheet

ET12055

Mechanical Specifications

Size

Description	Connector 1	Connector 2
Type	7/16 DIN Female	4.3-10 Female
Polarity	Standard	Standard
Mating Cycles	500	500

Material Specifications

	Connector 1		Connector 2	
Description	Material	Plating	Material	Plating
Type	7/16 DIN Female		4.3-10 Female	
Contact	Beryllium Copper	Silver	Beryllium Copper	Silver
Insulation	PTFE			
Outer Conductor	Bronze	Tri-Metal	Bronze	Tri-Metal
Body	Brass	Tri-Metal	Brass	Tri-Metal

Environmental Specifications

Temperature

Operating Range -55 to +120 deg C

Compliance Certifications (see product page for current document)

Plotted and Other Data

Notes:

Click the following link (or enter part number in “SEARCH” on website) to obtain additional part information including price, inventory and certifications: Low PIM 7/16 DIN Female to 4.3-10 Female Adapter ET12055

8th Floor, Building 1, Yongfu Science and Technology Center Industrial Park,
Nanzha District 5, Humen,523900, Dongguan, Guangdong, China.

Webstie:www.ebeestock.com Email:sales@ebeestock.com

© 2022 Ebeestock Enterprises All Rights Reserved

Low PIM 7/16 DIN Female to 4.3-10 Female Adapter

RF Adapters Technical Data Sheet ET12055

Low PIM 7/16 DIN Female to 4.3-10 Female Adapter from Ebeestock Enterprises has same day shipment for domestic and International orders. Our RF, microwave and millimeter wave products maintain a 99.4% availability and are part of the broadest selection in the industry.

Click the following link (or enter part number in “SEARCH” on website) to obtain additional part information including price, inventory and certifications: Low PIM 7/16 DIN Female to 4.3-10 Female Adapter ET12055

URL: https://www.ebeestock.com/low-pim-7-16-din-female-to-4-3-10-female-adapter-0012055

The information contained in this document is accurate to the best of our knowledge and representative of the part described herein. It may be necessary to make modifications to the part and/or the documentation of the part, in order to implement improvements. Ebeestock reserves the right to make such changes as required. Unless otherwise stated, all specifications are nominal. Ebeestock does not make any representation or warranty regarding the suitability of the part described herein for any particular purpose, and Ebeestock does not assume any liability arising out of the use of any part or documentation.

8th Floor, Building 1, Yongfu Science and Technology Center Industrial Park,
Nanzha District 5, Humen,523900, Dongguan, Guangdong, China.

Webstie:www.ebeestock.com Email:sales@ebeestock.com

© 2022 Ebeestock Enterprises All Rights Reserved

© 2022 Ebeestock Enterprises All Rights Reserved

www.ebeestock.com

REVISIONS			
REV.	DESCRIPTION	DATE	APPROVED
	INITIAL RELEASE	01/11/19	J.GARCIA

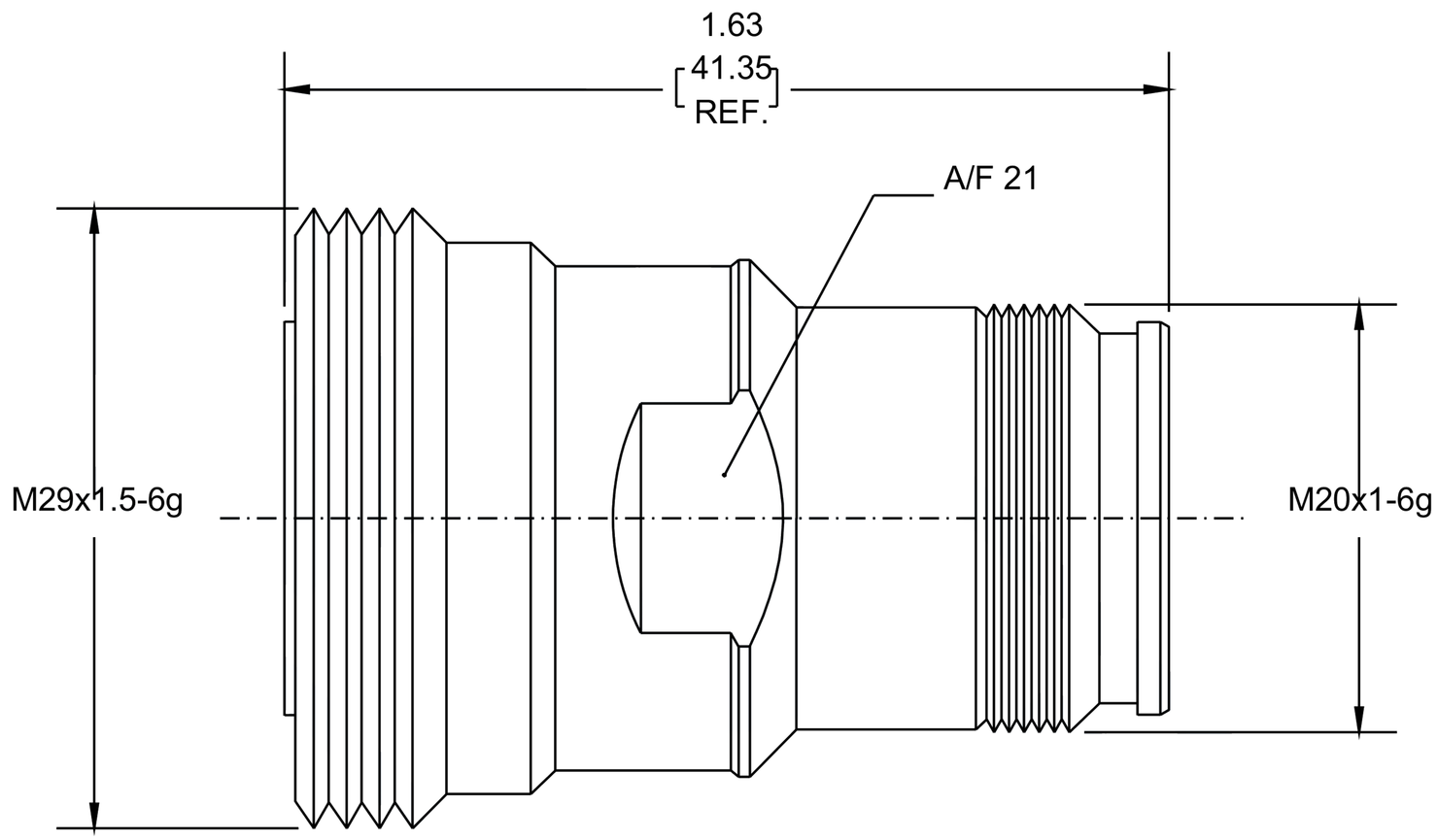

7/16
FEMALE

4.3-10
FEMALE

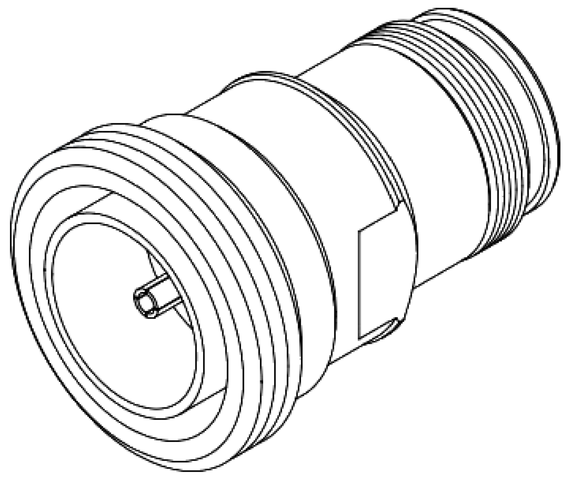

UNLESS OTHERWISE SPECIFIED
LEADING DIMENSIONS ARE INCHES
DIMENSIONS IN [ ] ARE MILLIMETERS

TOLERANCES:

.X=± .2	[5.08]	FRACTIONS
.XX=± .01	[.25]	± 1/32
.XXX=± .005	[.13]	ANGLES ± 1°

ALL DIMENSIONS SHOWN
ARE FOR REFERENCE ONLY.

THIRD-ANGLE PROJECTION

ebeestock
Ebeestock.com
8th Floor, Building 1, Yongfu Science
and Technology Center Industrial Park,
Nanzha District 5, Humen,523900, Dongguan, Guangdong, China.
Webstie: www.ebeestock.com **Email:** sales@ebeestock.com
e-mail: sales@ebeestock.com

THE INFORMATION AND
DESIGN IN THIS DOCUMENT
IS THE PROPERTY OF
Ebeestock CORPORATION. ALL
RIGHTS RESERVED.

SHEET	OF
1	1

SCALE N/A

SIZE	CAGE	DRAWN BY	PART NUMBER	REV
A	53919	G.HUAN	ET12055	A

THESE COMMODITIES, TECHNOLOGY OR SOFTWARE WERE EXPORTED FROM THE UNITED STATES IN ACCORDANCE WITH THE EXPORT ADMINISTRATION REGULATIONS. DIVERSION CONTRARY TO U.S. LAW PROHIBITED.