7/16 DIN Male to N Male Adapter, IP67 Mated

TECHNICAL DATA SHEET ET12069

Configuration	
Connector 1	7/16 DIN Male
Impedance 1	50 Ohms
Connector 2	N Male
Impedance 2	50 Ohms
Adapter Design	Standard
Body Style	Straight
Electrical Specifications	
Frequency Range	DC to 6 GHz
Maximum VSWR	1.15:1
Maximum Passive Intermodulation (2 x 20 Watts), dBc	160
Mechanical Specifications	
Size	
Length, in [mm]	1.681 [42.7]
Width/Dia., in [mm]	1.25 [31.75]
Connector 1	
Type	7/16 DIN Male
Inner Conductor Material and Plating	Beryllium Copper, Silver
Coupling Nut Material and Plating	Brass, Nickel
Hex Size, mm	32
Torque, ft-lbs [Nm]	18.333 [24.86]
Body Material and Plating	Brass, Nickel
Dielectric Type	PTFE
Connector 2	
Type	N Male
Inner Conductor Material and Plating	Beryllium Copper, Silver
Coupling Nut Material and Plating	Brass, Nickel
Hex Size, mm	20
Torque, in-lbs [Nm]	8.85 [1]
Body Material and Plating	Brass, Nickel
Dielectric Type	PTFE
Environmental Specifications	
Temperature	
Operating Range	-45 to +120 deg C
Ingress Protection	IP67 Mated

Compliance Certifications (visit for current document) RoHS Compliant

Click the following link (or enter part number in “SEARCH” on website) to obtain additional part information including price, inventory and certifications: 7/16 DIN Male to N Male Adapter IP67 Mated ET12069

8th Floor, Building 1, Yongfu Science and Technology Center Industrial Park,
Nanzha District 5, Humen,523900, Dongguan, Guangdong, China.

Webstie:www.ebeestock.com Email:sales@ebeestock.com

© 2022 Ebeestock Enterprises All Rights Reserved

7/16 DIN Male to N Male Adapter, IP67 Mated

TECHNICAL DATA SHEET ET12069

Plotted and Other Data

Notes:

- Values at +25 °C, sea level

7/16 DIN Male to N Male Adapter IP67 Mated from Ebeestock Enterprises has same day shipment for domestic and International orders. Our RF, microwave and millimeter wave products maintain a 99% availability and are part of the broadest selection in the industry.

Click the following link (or enter part number in “SEARCH” on website) to obtain additional part information including price, inventory and certifications: 7/16 DIN Male to N Male Adapter IP67 Mated ET12069

URL: https://www.ebeestock.com/7-16-din-male-to-n-male-adapter-ip67-mated-0012069

The information contained in this document is accurate to the best of our knowledge and representative of the part described herein. It may be necessary to make modifications to the part and/or the documentation of the part, in order to implement improvements. Ebeestock reserves the right to make such changes as required. Unless otherwise stated, all specifications are nominal. Ebeestock does not make any representation or warranty regarding the suitability of the part described herein for any particular purpose, and Ebeestock does not assume any liability arising out of the use of any part or documentation.

8th Floor, Building 1, Yongfu Science and Technology Center Industrial Park,
Nanzha District 5, Humen,523900, Dongguan, Guangdong, China.

Webstie:www.ebeestock.com Email:sales@ebeestock.com

© 2022 Ebeestock Enterprises All Rights Reserved

ET12069 CAD Drawing

7/16 DIN Male to N Male Adapter IP67 Mated

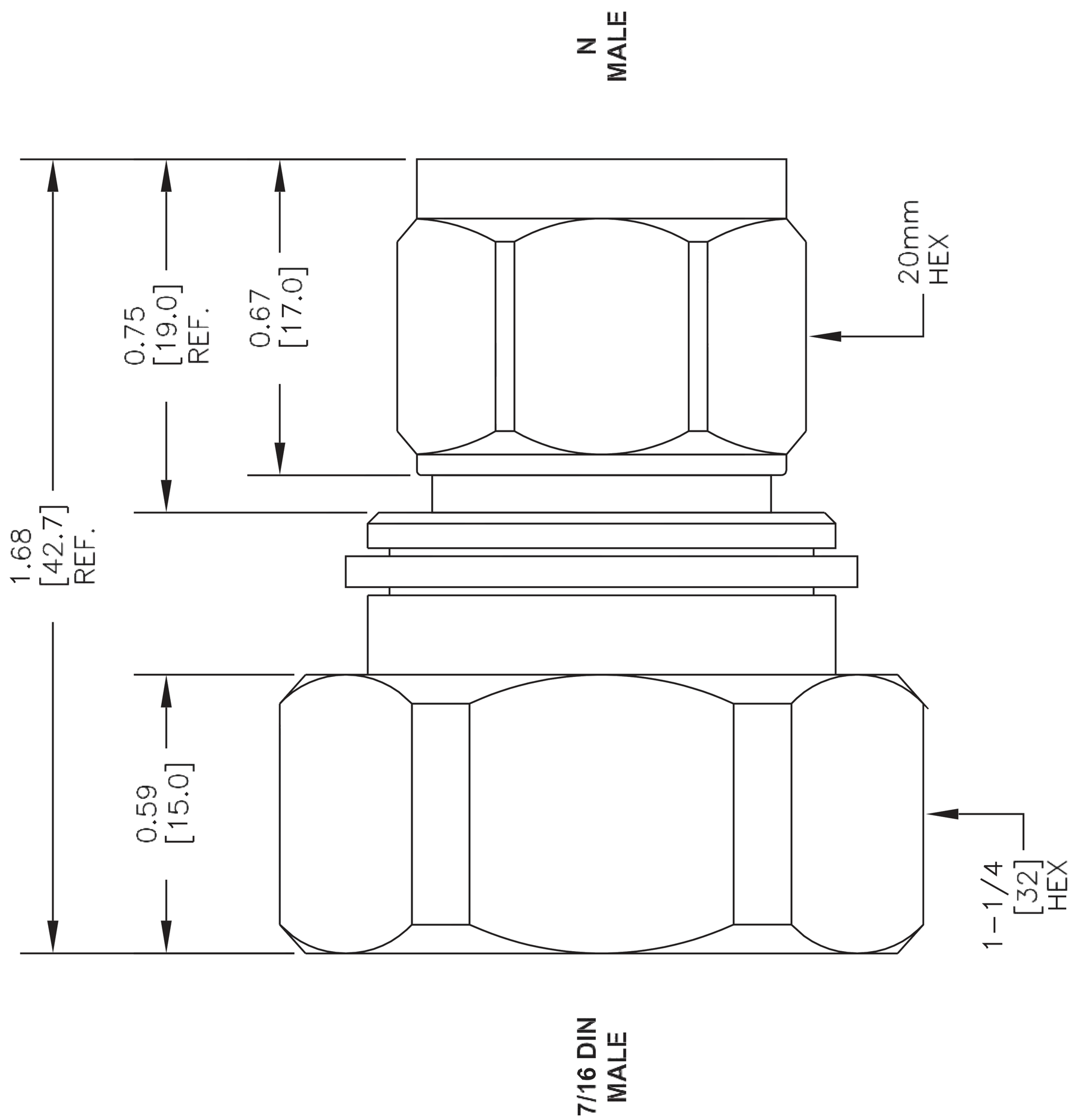

NOTES:
1. UNLESS OTHERWISE SPECIFIED ALL DIMENSIONS ARE NOMINAL.
2. ALL SPECIFICATIONS ARE SUBJECT TO CHANGE WITHOUT NOTICE AT ANY TIME.
3. DIMENSIONS ARE IN INCHES [mm].

DWG TITLE
ET12069

FSCM NO. 53919

CAD FILE 061114

SCALE N/A

SIZE A

2233

ebeestock
Ebeestock.com
8th Floor, Building 1, Yongfu Science
and Technology Center Industrial Park,
Nanzha District 5, Humen,523900, Dongguan, Guangdong, China.
Webstie: www.ebeestock.com Email: sales@ebeestock.com

© 2022 Ebeestock Enterprises All Rights Reserved