Bulkhead Mount 10-32 Female to 10-32 Female Adapter

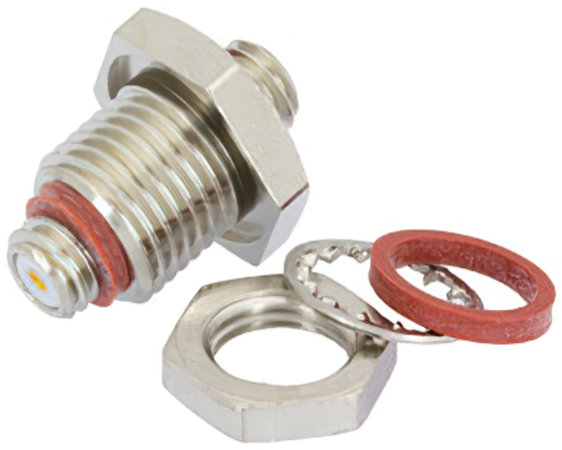

RF Adapters Technical Data Sheet

ET12125

Configuration

- 10-32 Female Connector 1
- 10-32 Female Connector 2
- 50 Ohms
- Straight Body Geometry
- Bulkhead Mount Method

Features

- 10-32 Interface compliant with MIL-C-39012
- Gold Plated Contact
- Contact Plating per MIL-G-45204

Applications

- General Purpose Test
- Rack Mounted Equipment

Description

Ebeestock's ET12125 bulkhead 10-32 female to 10-32 female adapter is part of our full line of RF components available for same-day shipping. Our 10-32 to 10-32 adapter has a female to female gender configuration. This RF 10-32 bulkhead to 10-32 adapter allows designers to create external connections on their product enclosures, and can be used in a variety of other rack mount and panel mount applications.

RF adapters are often used to enable connections between two connector types that would otherwise not mate. Certain adapter configurations can also be used to protect connectors on expensive equipment where the number of connect/disconnect cycles is high. An RF, microwave or millimeter wave adapter is connected to the equipment, and the commonly changed connection is made with the adapter which can be easily replaced when it wears out after high usage; such adapters are referred to as connector savers. Ebeestock also offers bulkhead, panel mount, hermetically sealed, reverse polarity, and isolated ground adapter varieties to serve all of your RF, microwave and millimeter wave needs.

Mechanical Specifications

Size		
Length	0.6 in [15.24 mm]	
Width	0.438 in [11.13 mm]	
Weight	0.013 lbs [5.9 g]	
Type	10-32 Female	10-32 Female
Polarity	Standard	Standard
Interface Specification	MIL-C-39012	MIL-C-39012

Click the following link (or enter part number in "SEARCH" on website) to obtain additional part information including price, inventory and certifications: Bulkhead 10-32 Female to 10-32 Female Adapter ET12125

8th Floor, Building 1, Yongfu Science and Technology Center Industrial Park,
Nanzha District 5, Humen,523900, Dongguan, Guangdong, China.

Webstie:www.ebeestock.com Email:sales@ebeestock.com

© 2022 Ebeestock Enterprises All Rights Reserved

Bulkhead Mount 10-32 Female to 10-32 Female Adapter

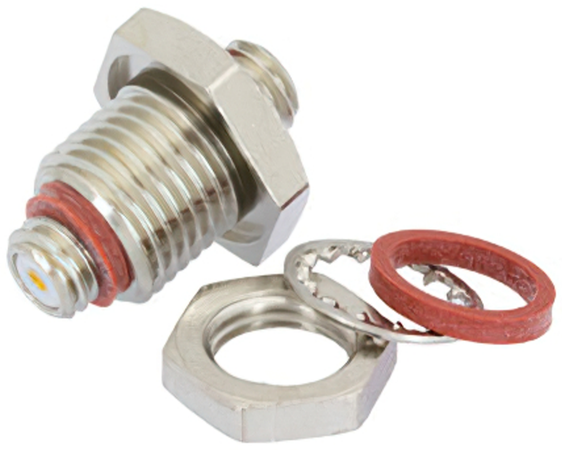

RF Adapters Technical Data Sheet ET12125

Material Specifications

Description	Connector 1 Material	Connector 1 Plating	Connector 2 Material	Connector 2 Plating
Type	10-32 Female		10-32 Female	
Contact		Gold MIL-G-45204		Gold MIL-G-45204
Insulation	PTFE		PTFE	
Outer Conductor	Brass	Nickel QQ-N-290	Brass	Nickel QQ-N-290

Environmental Specifications

Temperature

Operating Range -65 to +165 deg C

Compliance Certifications (see product page for current document)

Plotted and Other Data

Notes:

Bulkhead 10-32 Female to 10-32 Female Adapter from Ebeestock Enterprises has same day shipment for domestic and International orders. Our RF, microwave and millimeter wave products maintain a 99% availability and are part of the broadest selection in the industry.

Click the following link (or enter part number in “SEARCH” on website) to obtain additional part information including price, inventory and certifications: Bulkhead 10-32 Female to 10-32 Female Adapter ET12125

URL: https://www.ebeestock.com/bulkhead-mount-10-32-female-to-10-32-female-adapter-0012125

The information contained in this document is accurate to the best of our knowledge and representative of the part described herein. It may be necessary to make modifications to the part and/or the documentation of the part, in order to implement improvements. Ebeestock reserves the right to make such changes as required. Unless otherwise stated, all specifications are nominal. Ebeestock does not make any representation or warranty regarding the suitability of the part described herein for any particular purpose, and Ebeestock does not assume any liability arising out of the use of any part or documentation.

8th Floor, Building 1, Yongfu Science and Technology Center Industrial Park,
Nanzha District 5, Humen,523900, Dongguan, Guangdong, China.

Webstie:www.ebeestock.com Email:sales@ebeestock.com

© 2022 Ebeestock Enterprises All Rights Reserved

ET12125 CAD Drawing

Bulkhead 10-32 Female to 10-32 Female Adapter

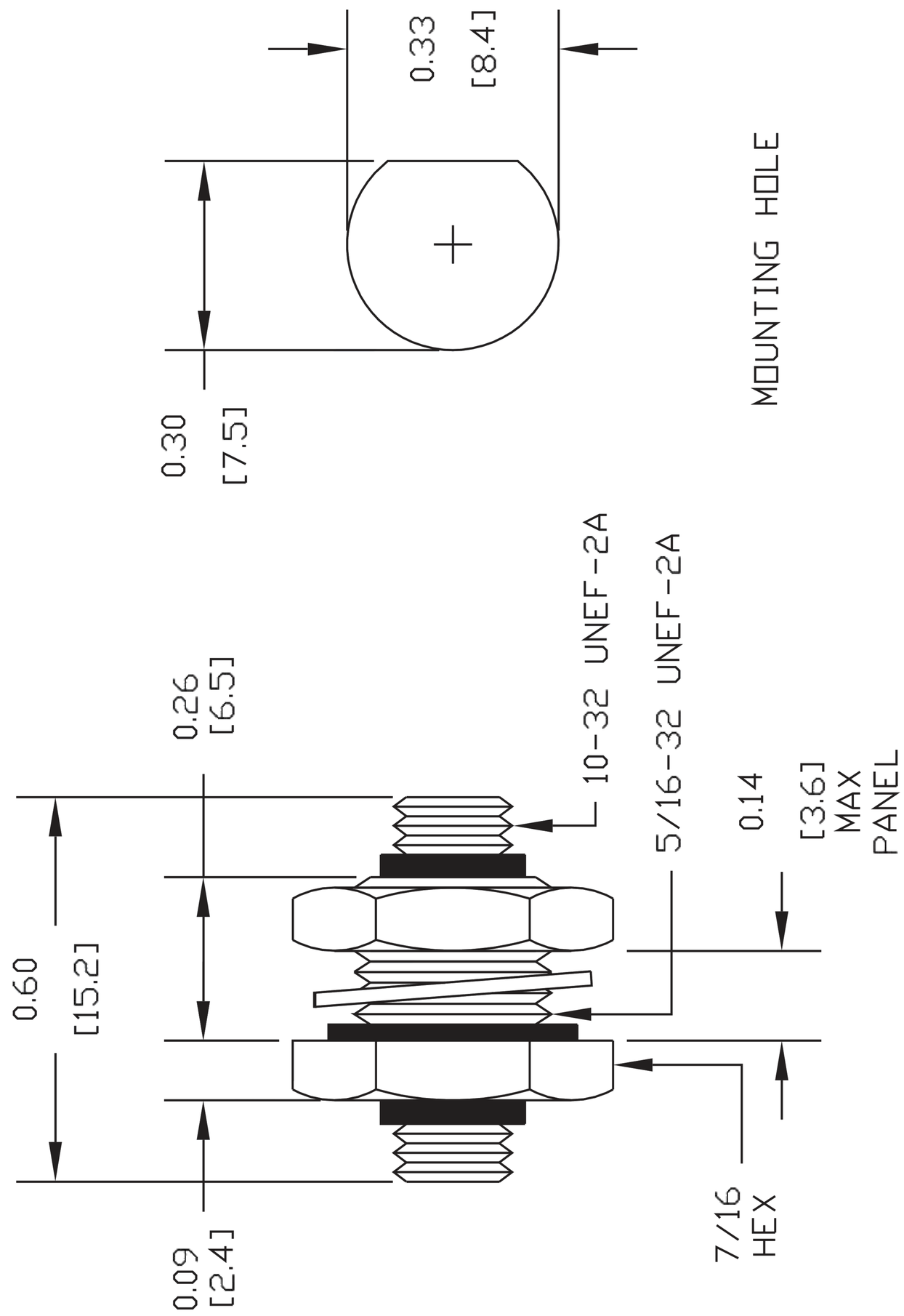

NOTES:
1. UNLESS OTHERWISE SPECIFIED ALL DIMENSIONS ARE NOMINAL.
2. ALL SPECIFICATIONS ARE SUBJECT TO CHANGE WITHOUT NOTICE AT ANY TIME.
3. DIMENSIONS ARE IN INCHES [mm].

DWG TITLE	REV. -	FSCM NO. 53919	CAD FILE 090903	SCALE N/A	SIZE A	127
ET12125						

ebeestock
Ebeestock.com
8th Floor, Building 1, Yongfu Science and Technology Center Industrial Park, Nanzha District 5, Humen,523900, Dongguan, Guangdong, China.
Webstie: www.ebeestock.com Email: sales@ebeestock.com

© 2022 Ebeestock Enterprises All Rights Reserved