BNC Male to BNC Female Right Angle Adapter

RF Adapters Technical Data Sheet

ET12139

Configuration

- BNC Male Connector 1
- BNC Female Connector 2
- 50 Ohms
- Right Angle Body Geometry

Features

- BNC Interface compliant with MIL-STD-348
- Gold Plated Beryllium Copper Contact
- 30 µin min Gold Contact Plating

Applications

- General Purpose Test

Description

Ebeestock's ET12139 BNC male to BNC female right angle adapter is part of our full line of RF components available for same-day shipping. Our BNC to BNC adapter has a male to female gender configuration. ET12139 BNC male to BNC female adapter operates to 4 GHz. This low profile right angle BNC adapter allows for easier connections in tight spaces.

RF adapters are often used to enable connections between two connector types that would otherwise not mate. Certain adapter configurations can also be used to protect connectors on expensive equipment where the number of connect/disconnect cycles is high. An RF, microwave or millimeter wave adapter is connected to the equipment, and the commonly changed connection is made with the adapter which can be easily replaced when it wears out after high usage; such adapters are referred to as connector savers. Ebeestock also offers bulkhead, panel mount, hermetically sealed, reverse polarity, and isolated ground adapter varieties to serve all of your RF, microwave and millimeter wave needs.

Electrical Specifications

Frequency Range	DC	4	GHz
Operating Voltage (AC)		500	Vrms
Dielectric Withstanding Voltage (AC)		1,500	Vrms

Electrical Specification Notes:
Values at 25°C, sea level.

Mechanical Specifications

Size

Length	1.06 in [26.92 mm]
Width	0.56 in [14.22 mm]
Height	0.9 in [22.86 mm]
Weight	0.033 lbs [14.97 g]

Click the following link (or enter part number in "SEARCH" on website) to obtain additional part information including price, inventory and certifications: BNC Male to BNC Female Right Angle Adapter ET12139

8th Floor, Building 1, Yongfu Science and Technology Center Industrial Park,
Nanzha District 5, Humen,523900, Dongguan, Guangdong, China.

Webstie:www.ebeestock.com Email:sales@ebeestock.com

© 2022 Ebeestock Enterprises All Rights Reserved

BNC Male to BNC Female Right Angle Adapter

RF Adapters Technical Data Sheet ET12139

Description	Connector 1	Connector 2
Type	BNC Male	BNC Female
Polarity	Standard	Standard
Interface Specification	MIL-STD-348	MIL-STD-348

Material Specifications

Description	Connector 1 Material	Connector 1 Plating	Connector 2 Material	Connector 2 Plating
Type	BNC Male		BNC Female	
Contact	Beryllium Copper	Gold 30 µin minimum	Beryllium Copper	Gold 30 µin minimum
Insulation	PTFE		PTFE	
Outer Conductor			Brass	Nickel 150 µin minimum
Body	Brass	Nickel 150 µin minimum		

Environmental Specifications

Temperature

Operating Range -65 to +165 deg C

Compliance Certifications (see product page for current document)

Plotted and Other Data

Notes:

Click the following link (or enter part number in “SEARCH” on website) to obtain additional part information including price, inventory and certifications: BNC Male to BNC Female Right Angle Adapter ET12139

8th Floor, Building 1, Yongfu Science and Technology Center Industrial Park,
Nanzha District 5, Humen,523900, Dongguan, Guangdong, China.

Webstie:www.ebeestock.com Email:sales@ebeestock.com

© 2022 Ebeestock Enterprises All Rights Reserved

BNC Male to BNC Female Right Angle Adapter

RF Adapters Technical Data Sheet ET12139

BNC Male to BNC Female Right Angle Adapter from Ebeestock Enterprises has same day shipment for domestic and International orders. Our RF, microwave and millimeter wave products maintain a 99% availability and are part of the broadest selection in the industry.

Click the following link (or enter part number in “SEARCH” on website) to obtain additional part information including price, inventory and certifications: BNC Male to BNC Female Right Angle Adapter ET12139

URL: https://www.ebeestock.com/bnc-male-to-bnc-female-right-angle-adapter-0012139

The information contained in this document is accurate to the best of our knowledge and representative of the part described herein. It may be necessary to make modifications to the part and/or the documentation of the part, in order to implement improvements. Ebeestock reserves the right to make such changes as required. Unless otherwise stated, all specifications are nominal. Ebeestock does not make any representation or warranty regarding the suitability of the part described herein for any particular purpose, and Ebeestock does not assume any liability arising out of the use of any part or documentation.

© 2022 Ebeestock Enterprises All Rights Reserved

ET12139 CAD Drawing

BNC Male to BNC Female Right Angle Adapter

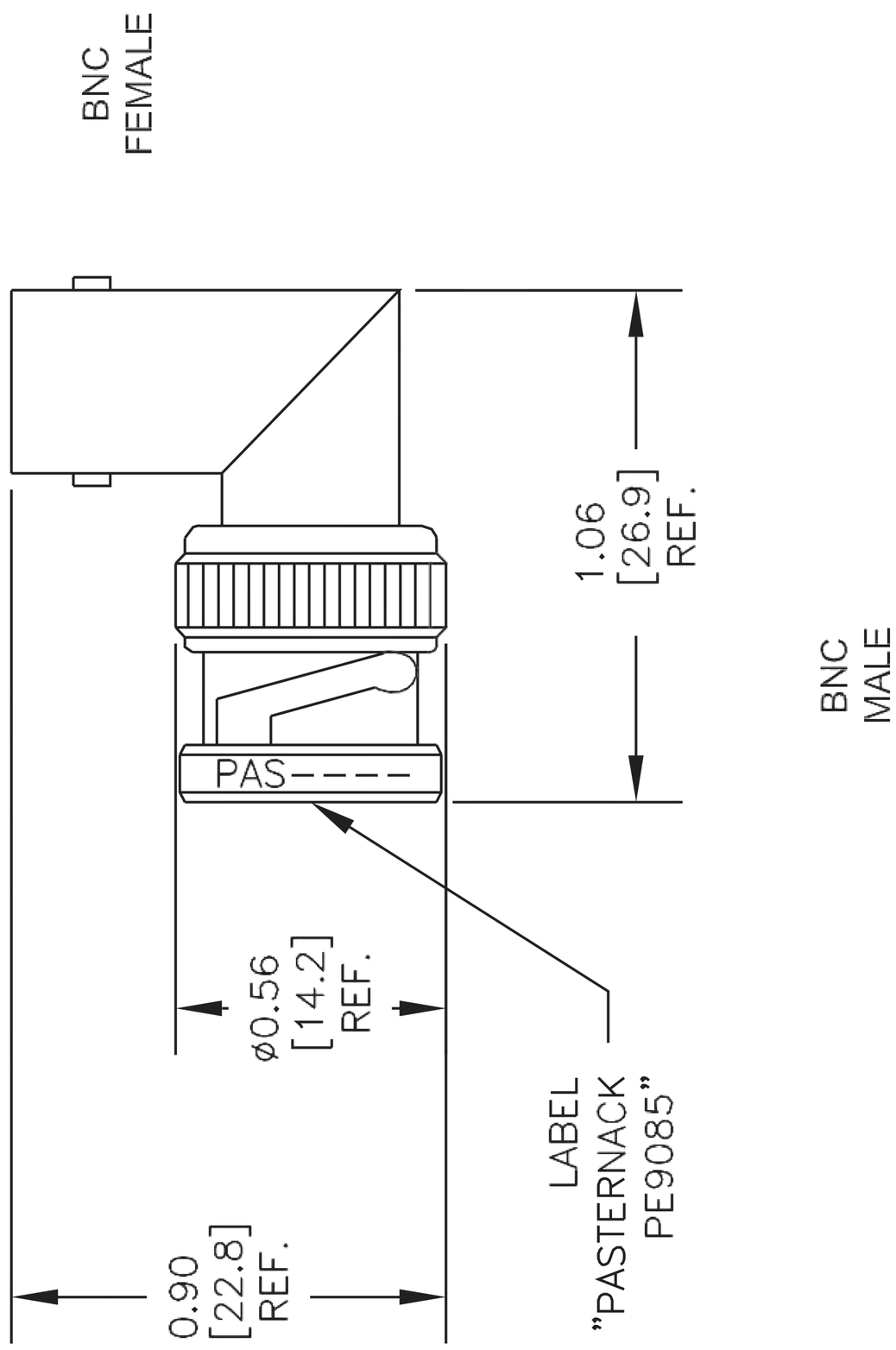

STANDARD TOLERANCES	
.X	±0.2
.XX	±0.1
.XXX	±0.05

*STANDARD TOLERANCES APPLY ONLY TO DIMENSIONS IN INCHES

NOTES:
1. UNLESS OTHERWISE SPECIFIED ALL DIMENSIONS ARE NOMINAL.
2. ALL SPECIFICATIONS ARE SUBJECT TO CHANGE WITHOUT NOTICE AT ANY TIME.
3. DIMENSIONS ARE IN INCHES [mm].

DWG TITLE
ET12139

FSCM NO. 53919

CAD FILE 083016

SCALE N/A

SIZE A

41742

ebeestock
Ebeestock.com
8th Floor, Building 1, Yongfu Science and Technology Center Industrial Park, Nanzha District 5, Humen,523900, Dongguan, Guangdong, China.
Webstie: www.ebeestock.com Email: sales@ebeestock.com

© 2022 Ebeestock Enterprises All Rights Reserved