SMC Plug to BNC Male Adapter

RF Adapters Technical Data Sheet

ET12204

Configuration

- SMC Plug Connector 1
- BNC Male Connector 2
- 50 Ohms
- Straight Body Geometry

Features

- SMC Interface compliant with MIL-STD-348A
- BNC Interface compliant with MIL-STD-348A
- Gold Plated Brass Contact
- 30 µ-in min Gold Contact Plating

Applications

- Allows Connection Between Series
- General Purpose Test

Description

Ebeestock's ET12204 SMC plug to BNC male adapter is part of our full line of RF components available for same-day shipping. Our SMC to BNC adapter has a plug to male gender configuration.

RF adapters are often used to enable connections between two connector types that would otherwise not mate. Certain adapter configurations can also be used to protect connectors on expensive equipment where the number of connect/disconnect cycles is high. An RF, microwave or millimeter wave adapter is connected to the equipment, and the commonly changed connection is made with the adapter which can be easily replaced when it wears out after high usage; such adapters are referred to as connector savers. Ebeestock also offers bulkhead, panel mount, hermetically sealed, reverse polarity, and isolated ground adapter varieties to serve all of your RF, microwave and millimeter wave needs.

Mechanical Specifications

Size

Length	1.22 in [30.99 mm]
Width	0.57 in [14.48 mm]
Weight	0.034 lbs [15.42 g]

Type	SMC Plug	BNC Male
Polarity	Standard	Standard
Interface Specification	MIL-STD-348A	MIL-STD-348A
Hex Size	1/4 in.	
Mating Torque	3 to 5 in-lbs [0.34 to 0.57 Nm]	

Material Specifications

	Connector 1		Connector 2	
Type	SMC Plug		BNC Male	
Contact	Brass	Gold	Brass	Gold

Click the following link (or enter part number in "SEARCH" on website) to obtain additional part information including price, inventory and certifications: SMC Plug to BNC Male Adapter ET12204

8th Floor, Building 1, Yongfu Science and Technology Center Industrial Park,
Nanzha District 5, Humen,523900, Dongguan, Guangdong, China.

Webstie:www.ebeestock.com Email:sales@ebeestock.com

© 2022 Ebeestock Enterprises All Rights Reserved

SMC Plug to BNC Male Adapter

RF Adapters Technical Data Sheet ET12204

		30 µ-in minimum		30 µ-in minimum
Insulation	PTFE		PTFE	
Body	Brass	Nickel	Brass	Nickel
		100 µ-in minimum		100 µ-in minimum
Coupling Nut	Brass	Nickel	Brass	Nickel
		100 µ-in minimum		100 µ-in minimum

Compliance Certifications (see product page for current document)

SMC Plug to BNC Male Adapter from Ebeestock Enterprises has same day shipment for domestic and International orders. Our RF, microwave and millimeter wave products maintain a 99% availability and are part of the broadest selection in the industry.

Click the following link (or enter part number in “SEARCH” on website) to obtain additional part information including price, inventory and certifications: SMC Plug to BNC Male Adapter ET12204

URL: https://www.ebeestock.com/smc-plug-to-bnc-male-adapter-0012204

The information contained in this document is accurate to the best of our knowledge and representative of the part described herein. It may be necessary to make modifications to the part and/or the documentation of the part, in order to implement improvements. Ebeestock reserves the right to make such changes as required. Unless otherwise stated, all specifications are nominal. Ebeestock does not make any representation or warranty regarding the suitability of the part described herein for any particular purpose, and Ebeestock does not assume any liability arising out of the use of any part or documentation.

8th Floor, Building 1, Yongfu Science and Technology Center Industrial Park,
Nanzha District 5, Humen,523900, Dongguan, Guangdong, China.

Webstie:www.ebeestock.com Email:sales@ebeestock.com

© 2022 Ebeestock Enterprises All Rights Reserved

ET12204 CAD Drawing

SMC Plug to BNC Male Adapter

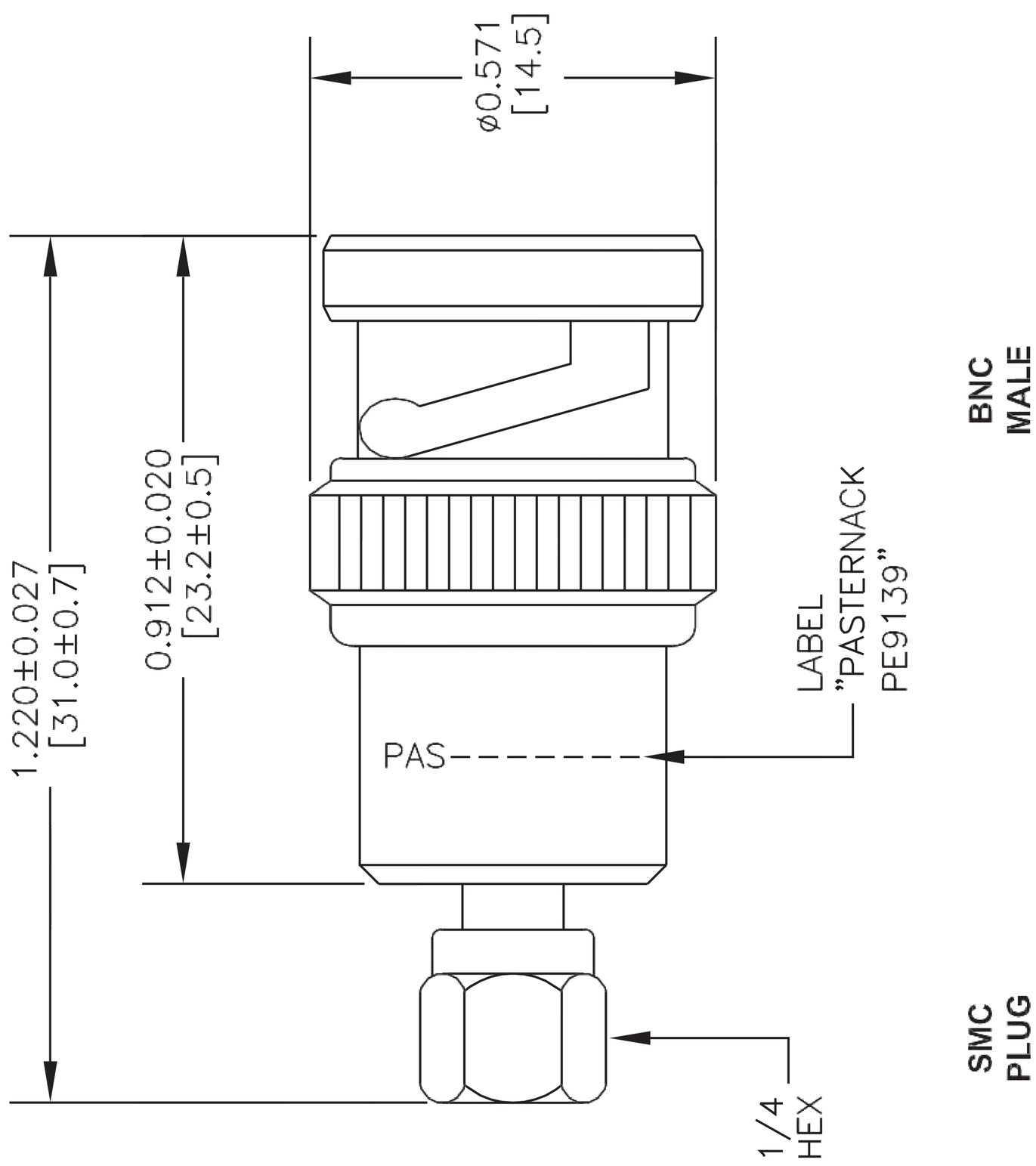

STANDARD TOLERANCES	
.X	±0.2
.XX	±0.1
.XXX	±0.05

*STANDARD TOLERANCES APPLY ONLY TO DIMENSIONS IN INCHES

NOTES:
1. UNLESS OTHERWISE SPECIFIED ALL DIMENSIONS ARE NOMINAL.
2. ALL SPECIFICATIONS ARE SUBJECT TO CHANGE WITHOUT NOTICE AT ANY TIME.
3. DIMENSIONS ARE IN INCHES [mm].

DWG TITLE			
ET12204			
FSCM NO. 53919	CAD FILE 022216	SCALE N/A	SIZE A 3045

ebeestock
Ebeestock.com
8th Floor, Building 1, Yongfu Science and Technology Center Industrial Park, Nanzha District 5, Humen,523900, Dongguan, Guangdong, China.
Webstie: www.ebeestock.com Email: sales@ebeestock.com

© 2022 Ebeestock Enterprises All Rights Reserved