GR874 to BNC Male Adapter

RF Adapters Technical Data Sheet

ET12215

Configuration

- GR874 Sexless Connector 1
- BNC Male Connector 2
- 50 Ohms
- Straight Body Geometry

Features

- BNC Interface compliant with MIL-STD-348
- Contact Plating per QQ-S-365

Applications

- Allows Connection Between Series
- General Purpose Test

Description

Ebeestock's ET12215 GR874 to BNC male adapter is part of our full line of RF components available for same-day shipping. Our GR874 to BNC adapter has a sexless to male gender configuration.

RF adapters are often used to enable connections between two connector types that would otherwise not mate. Certain adapter configurations can also be used to protect connectors on expensive equipment where the number of connect/disconnect cycles is high. An RF, microwave or millimeter wave adapter is connected to the equipment, and the commonly changed connection is made with the adapter which can be easily replaced when it wears out after high usage; such adapters are referred to as connector savers. Ebeestock also offers bulkhead, panel mount, hermetically sealed, reverse polarity, and isolated ground adapter varieties to serve all of your RF, microwave and millimeter wave needs.

Mechanical Specifications

Size

Length	1.8 in [45.72 mm]
Width	0.81 in [20.57 mm]
Weight	0.08 lbs [36.29 g]

Type	GR874 Sexless	BNC Male
Polarity	Standard	Standard
Interface Specification		MIL-STD-348

Click the following link (or enter part number in "SEARCH" on website) to obtain additional part information including price, inventory and certifications: GR874 to BNC Male Adapter ET12215

8th Floor, Building 1, Yongfu Science and Technology Center Industrial Park,
Nanzha District 5, Humen,523900, Dongguan, Guangdong, China.

Webstie:www.ebeestock.com Email:sales@ebeestock.com

© 2022 Ebeestock Enterprises All Rights Reserved

GR874 to BNC Male Adapter

RF Adapters Technical Data Sheet ET12215

Material Specifications

Description	Connector 1 Material	Connector 1 Plating	Connector 2 Material	Connector 2 Plating
Type	GR874 Sexless		BNC Male	
Contact		Nickel QQ-N-290		Silver QQ-S-365
Insulation	PTFE		PTFE	
Body	Brass	Nickel QQ-N-290	Brass	Nickel QQ-N-290
Coupling Nut			Brass	Nickel QQ-N-290

Compliance Certifications (see product page for current document)

GR874 to BNC Male Adapter from Ebeestock Enterprises has same day shipment for domestic and International orders. Our RF, microwave and millimeter wave products maintain a 99% availability and are part of the broadest selection in the industry.

Click the following link (or enter part number in “SEARCH” on website) to obtain additional part information including price, inventory and certifications: GR874 to BNC Male Adapter ET12215

URL: https://www.ebeestock.com/gr874-to-bnc-male-adapter-0012215

The information contained in this document is accurate to the best of our knowledge and representative of the part described herein. It may be necessary to make modifications to the part and/or the documentation of the part, in order to implement improvements. Ebeestock reserves the right to make such changes as required. Unless otherwise stated, all specifications are nominal. Ebeestock does not make any representation or warranty regarding the suitability of the part described herein for any particular purpose, and Ebeestock does not assume any liability arising out of the use of any part or documentation.

8th Floor, Building 1, Yongfu Science and Technology Center Industrial Park,
Nanzha District 5, Humen,523900, Dongguan, Guangdong, China.

Webstie:www.ebeestock.com Email:sales@ebeestock.com

© 2022 Ebeestock Enterprises All Rights Reserved

ET12215 CAD Drawing

GR874 to BNC Male Adapter

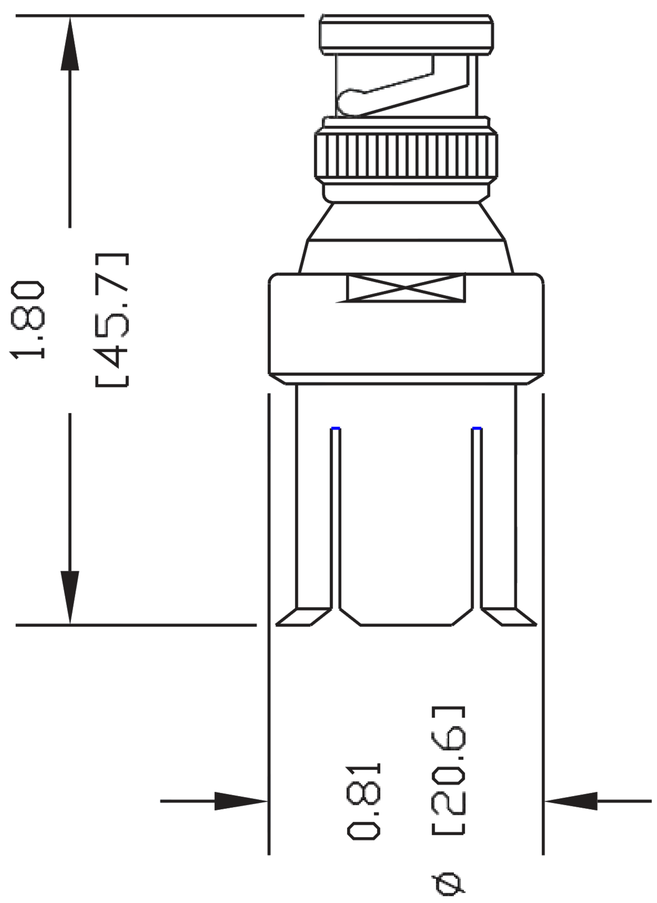

NOTES:
1. UNLESS OTHERWISE SPECIFIED ALL DIMENSIONS ARE NOMINAL.
2. ALL SPECIFICATIONS ARE SUBJECT TO CHANGE WITHOUT NOTICE AT ANY TIME.
3. DIMENSIONS ARE IN INCHES [mm].

DWG TITLE
ET12215

REV. -

FSCM NO. 53919

CAD FILE 081905

SCALE N/A

SIZE A

127

ebeestock
Ebeestock.com
8th Floor, Building 1, Yongfu Science
and Technology Center Industrial Park,
Nanzha District 5, Humen,523900, Dongguan, Guangdong, China.
Webstie: www.ebeestock.com Email: sales@ebeestock.com

© 2022 Ebeestock Enterprises All Rights Reserved