50 Ohm SMA Female to 75 Ohm F Male Adapter

RF Adapters Technical Data Sheet

ET12317

Configuration

- SMA Female Connector 1
- F Male Connector 2
- 50 Ohm, 75 Ohm
- Straight Body Geometry

Features

- Max VSWR of 1.5:1 up to 500 MHz
- SMA interface compliant with MIL-STD-348
- Type F interface compliant with MIL-C-39012
- Contact plating according to MIL-G-45204
- Gold Plated Contact

Applications

- Allows Connection Between Series
- General Purpose Test
- Allows Connection Between Series
- General Purpose Test

Description

Ebeestock's ET12317 50 ohm SMA female to 75 ohm type F male adapter is part of our full line of RF components available for same-day shipping. The SMA connector mates mechanically with commercially available 3.5mm and 2.92mm (K) connectors. Our SMA to type F adapter has a female to male gender configuration. ET12317 SMA female to type F male adapter operates to 500 MHz. The Ebeestock RF adapter provides good VSWR of 1.5:1 maximum.

RF adapters are often used to enable connections between two connector types that would otherwise not mate. Certain adapter configurations can also be used to protect connectors on expensive equipment where the number of connect/disconnect cycles is high. An RF, microwave or millimeter wave adapter is connected to the equipment, and the commonly changed connection is made with the adapter which can be easily replaced when it wears out after high usage; such adapters are referred to as connector savers. Ebeestock also offers bulkhead, panel mount, hermetically sealed, reverse polarity, and isolated ground adapter varieties to serve all of your RF, microwave and millimeter wave needs.

Electrical Specifications

Description	Minimum	Typical	Maximum	Units
Frequency Range	DC		500	MHz
VSWR			1.5:1	
Operating Voltage (AC)			500	Vrms
Dielectric Withstanding Voltage (AC)			1,500	Vrms
Insulation Resistance	5,000			MOhms

Electrical Specification Notes:
Values at 25°C, sea level.

Mechanical Specifications

Size

Length	0.96 in [24.38 mm]
Width	0.438 in [11.13 mm]
Weight	0.018 lbs [8.16 g]

Click the following link (or enter part number in "SEARCH" on website) to obtain additional part information including price, inventory and certifications: 50 Ohm SMA Female to 75 Ohm F Male Adapter ET12317

8th Floor, Building 1, Yongfu Science and Technology Center Industrial Park,
Nanzha District 5, Humen,523900, Dongguan, Guangdong, China.

Webstie:www.ebeestock.com Email:sales@ebeestock.com

© 2022 Ebeestock Enterprises All Rights Reserved

50 Ohm SMA Female to 75 Ohm F Male Adapter

RF Adapters Technical Data Sheet

ET12317

Description	Connector 1	Connector 2
Type	SMA Female	F Male
Polarity	Standard	Standard
Interface Specification	MIL-STD-348	MIL-C-39012
Hex Size		7/16 in.

Mechanical Specification Notes:
Not all “F” type connectors will mate with all “F” type connectors
There is no impedence transformation within this part : VSWR>1.50:1

Material Specifications

Description	Connector 1 Material	Connector 1 Plating	Connector 2 Material	Connector 2 Plating
Type	SMA Female		F Male	
Contact	Beryllium Copper	Gold MIL-G-45204	Beryllium Copper	Gold MIL-G-45204
Insulation	PTFE		PTFE	
Outer Conductor	Brass	Nickel QQ-N-290		
Body			Brass	Nickel QQ-N-290
Coupling Nut			Brass	Nickel QQ-N-290

Environmental Specifications

Temperature

Operating Range -65 to +165 deg C

Compliance Certifications (see product page for current document)

Plotted and Other Data

Notes:

Click the following link (or enter part number in “SEARCH” on website) to obtain additional part information including price, inventory and certifications: 50 Ohm SMA Female to 75 Ohm F Male Adapter ET12317

8th Floor, Building 1, Yongfu Science and Technology Center Industrial Park,
Nanzha District 5, Humen,523900, Dongguan, Guangdong, China.

Webstie:www.ebeestock.com Email:sales@ebeestock.com

© 2022 Ebeestock Enterprises All Rights Reserved

50 Ohm SMA Female to 75 Ohm F Male Adapter

RF Adapters Technical Data Sheet ET12317

50 Ohm SMA Female to 75 Ohm F Male Adapter from Ebeestock Enterprises has same day shipment for domestic and International orders. Our RF, microwave and millimeter wave products maintain a 99% availability and are part of the broadest selection in the industry.

Click the following link (or enter part number in “SEARCH” on website) to obtain additional part information including price, inventory and certifications: 50 Ohm SMA Female to 75 Ohm F Male Adapter ET12317

URL: https://www.ebeestock.com/50-ohm-sma-female-to-75-ohm-f-male-adapter-0012317

The information contained in this document is accurate to the best of our knowledge and representative of the part described herein. It may be necessary to make modifications to the part and/or the documentation of the part, in order to implement improvements. Ebeestock reserves the right to make such changes as required. Unless otherwise stated, all specifications are nominal. Ebeestock does not make any representation or warranty regarding the suitability of the part described herein for any particular purpose, and Ebeestock does not assume any liability arising out of the use of any part or documentation.

8th Floor, Building 1, Yongfu Science and Technology Center Industrial Park,
Nanzha District 5, Humen,523900, Dongguan, Guangdong, China.

Webstie:www.ebeestock.com Email:sales@ebeestock.com

© 2022 Ebeestock Enterprises All Rights Reserved

© 2022 Ebeestock Enterprises All Rights Reserved

www.ebeestock.com

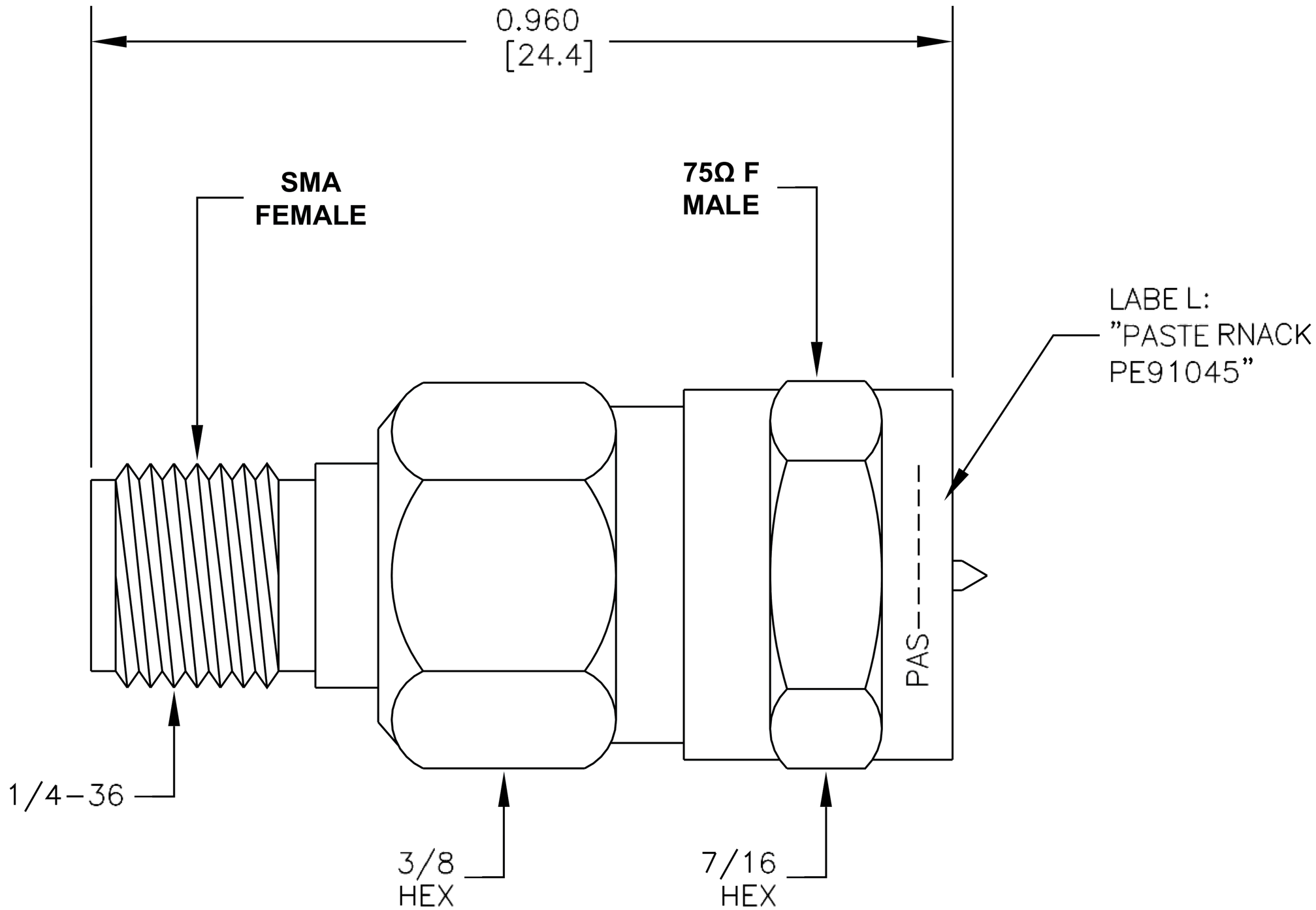

STANDARD TOLERANCES
±
±

*STANDARD TOLERANCES APPLY ONLY TO DIMENSIONS IN INCHES

PASTERNACK®
THE ENGINEER'S RF SOURCE
Pasternack Enterprises, Inc.
P.O. Box 16759 | Irvine | CA | 92623
Phone: (949) 261-1920 | **Fax:** (949) 261-7451
Website: www.pasternack.com | **E-Mail:** sales@pasternack.com

DWG TITLE

ET12317

FSCM NO. 53919

NOTES:
1. UNLESS OTHERWISE SPECIFIED ALL DIMENSIONS ARE NOMINAL.
2. ALL SPECIFICATIONS ARE SUBJECT TO CHANGE WITHOUT NOTICE AT ANY TIME.
3. DIMENSIONS ARE IN INCHES [mm].

CAD FILE	061116	SCALE N/A	SIZE A	3045