75 Ohm N Female to 75 Ohm F Male Adapter

RF Adapters Technical Data Sheet

ET12329

Configuration

- N Female Connector 1
- F Male Connector 2
- 75 Ohms
- Straight Body Geometry

Features

- Max VSWR of 1.3:1 up to 3 GHz

Applications

- Allows Connection Between Series
- General Purpose Test

Description

Ebeestock's ET12329 75 ohm type N female to type F male adapter is part of our full line of RF components available for same-day shipping. Our type N to type F adapter has a female to male gender configuration. ET12329 type N female to type F male adapter operates to 3 GHz. The Ebeestock RF adapter provides good VSWR of 1.3:1 maximum.

RF adapters are often used to enable connections between two connector types that would otherwise not mate. Certain adapter configurations can also be used to protect connectors on expensive equipment where the number of connect/disconnect cycles is high. An RF, microwave or millimeter wave adapter is connected to the equipment, and the commonly changed connection is made with the adapter which can be easily replaced when it wears out after high usage; such adapters are referred to as connector savers. Ebeestock also offers bulkhead, panel mount, hermetically sealed, reverse polarity, and isolated ground adapter varieties to serve all of your RF, microwave and millimeter wave needs.

Electrical Specifications

Frequency Range	DC	3	GHz
VSWR		1.3:1	

Performance by Frequency

Frequency Range	DC to 2	2 to 3	GHz
VSWR, Max	1.15:1	1.3:1	

Mechanical Specifications

Size

Length	1.75 in [44.45 mm]
Width	0.625 in [15.88 mm]
Weight	0.086 lbs [39.01 g]

Click the following link (or enter part number in "SEARCH" on website) to obtain additional part information including price, inventory and certifications: 75 Ohm N Female to F Male Adapter ET12329

8th Floor, Building 1, Yongfu Science and Technology Center Industrial Park,
Nanzha District 5, Humen,523900, Dongguan, Guangdong, China.

Webstie:www.ebeestock.com Email:sales@ebeestock.com

© 2022 Ebeestock Enterprises All Rights Reserved

75 Ohm N Female to 75 Ohm F Male Adapter

RF Adapters Technical Data Sheet ET12329

Description	Connector 1	Connector 2
Type	N Female	F Male
Polarity	Standard	Standard
Hex Size		7/16 in.

Material Specifications

	Connector 1		Connector 2	
Description	Material	Plating	Material	Plating
Type	N Female		F Male	
Contact	Beryllium Copper	Gold		Nickel
Outer Conductor	Passivated Stainless Steel			
Body			Brass	Nickel

Environmental Specifications

Temperature

Operating Range -65 to +125 deg C

Compliance Certifications (see product page for current document)

Plotted and Other Data

Notes:

75 Ohm N Female to F Male Adapter from Ebeestock Enterprises has same day shipment for domestic and International orders. Our RF, microwave and millimeter wave products maintain a 99% availability and are part of the broadest selection in the industry.

Click the following link (or enter part number in “SEARCH” on website) to obtain additional part information including price, inventory and certifications: 75 Ohm N Female to F Male Adapter ET12329

URL: https://www.ebeestock.com/75-ohm-n-female-to-75-ohm-f-male-adapter-0012329

The information contained in this document is accurate to the best of our knowledge and representative of the part described herein. It may be necessary to make modifications to the part and/or the documentation of the part, in order to implement improvements. Ebeestock reserves the right to make such changes as required. Unless otherwise stated, all specifications are nominal. Ebeestock does not make any representation or warranty regarding the suitability of the part described herein for any particular purpose, and Ebeestock does not assume any liability arising out of the use of any part or documentation.

8th Floor, Building 1, Yongfu Science and Technology Center Industrial Park,
Nanzha District 5, Humen,523900, Dongguan, Guangdong, China.

Webstie:www.ebeestock.com Email:sales@ebeestock.com

© 2022 Ebeestock Enterprises All Rights Reserved

ET12329 CAD Drawing

75 Ohm N Female to F Male Adapter

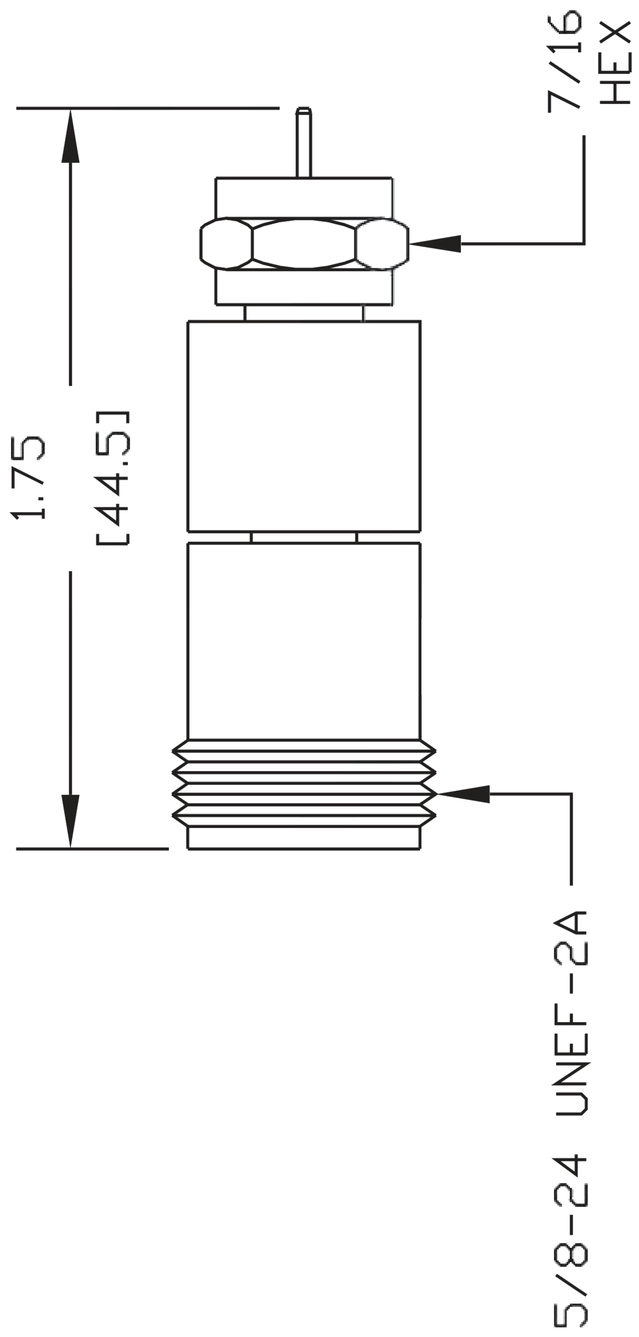

NOTES:
1. UNLESS OTHERWISE SPECIFIED ALL DIMENSIONS ARE NOMINAL.
2. ALL SPECIFICATIONS ARE SUBJECT TO CHANGE WITHOUT NOTICE AT ANY TIME.
3. DIMENSIONS ARE IN INCHES [mm].

DWG TITLE
ET12329

REV. -

FSCM NO. 53919

CAD FILE 050703

SCALE N/A

SIZE A

127

ebeestock
Ebeestock.com
8th Floor, Building 1, Yongfu Science
and Technology Center Industrial Park,
Nanzha District 5, Humen,523900, Dongguan, Guangdong, China.
Webstie: www.ebeestock.com Email: sales@ebeestock.com

© 2022 Ebeestock Enterprises All Rights Reserved