SMA Male to HN Male Adapter

RF Adapters Technical Data Sheet

ET12364

Configuration

- SMA Male Connector 1
- HN Male Connector 2
- 50 Ohm
- Straight Body Geometry

Features

- Max VSWR of 1.4:1 up to 4 GHz
- SMA interface compliant with MIL-STD-348
- HN interface compliant with MIL-STD-348
- Contact plating according to MIL-G-45204
- Gold Plated Brass Contact

Applications

- Allows Connection Between Series
- General Purpose Test

Description

Ebeestock's ET12364 SMA male to HN male adapter is part of our full line of RF components available for same-day shipping. The SMA connector mates mechanically with commercially available 3.5mm and 2.92mm (K) connectors. Our SMA to HN adapter has a male to male gender configuration. ET12364 SMA male to HN male adapter operates to 4 GHz. The Ebeestock RF adapter provides good VSWR of 1.4:1 maximum.

RF adapters are often used to enable connections between two connector types that would otherwise not mate. Certain adapter configurations can also be used to protect connectors on expensive equipment where the number of connect/disconnect cycles is high. An RF, microwave or millimeter wave adapter is connected to the equipment, and the commonly changed connection is made with the adapter which can be easily replaced when it wears out after high usage; such adapters are referred to as connector savers. Ebeestock also offers bulkhead, panel mount, hermetically sealed, reverse polarity, and isolated ground adapter varieties to serve all of your RF, microwave and millimeter wave needs.

Electrical Specifications

Description	Minimum	Typical	Maximum	Units
Frequency Range	DC		4	GHz
VSWR			1.4:1	
Operating Voltage (AC)			335	Vrms
Dielectric Withstanding Voltage (AC)			1,000	Vrms
Insulation Resistance	5,000			MOhms

Mechanical Specifications

Size

Length	1.48 in [37.59 mm]
Width	0.88 in [22.35 mm]
Weight	0.09 lbs [40.82 g]

Click the following link (or enter part number in "SEARCH" on website) to obtain additional part information including price, inventory and certifications: SMA Male to HN Male Adapter ET12364

8th Floor, Building 1, Yongfu Science and Technology Center Industrial Park,
Nanzha District 5, Humen,523900, Dongguan, Guangdong, China.

Webstie:www.ebeestock.com Email:sales@ebeestock.com

© 2022 Ebeestock Enterprises All Rights Reserved

SMA Male to HN Male Adapter

RF Adapters Technical Data Sheet ET12364

Description	Connector 1	Connector 2
Type	SMA Male	HN Male
Polarity	Standard	Standard
Interface Specification	MIL-STD-348	MIL-STD-348
Hex Size	5/16 in.	
Mating Torque	3 to 5 in-lbs [0.34 to 0.57 Nm]	

Material Specifications

Description	Connector 1 Material	Connector 1 Plating	Connector 2 Material	Connector 2 Plating
Type	SMA Male		HN Male	
Contact	Brass	Gold MIL-G-45204	Brass	Gold MIL-G-45204
Insulation	PTFE		PTFE	
Body	Brass	Nickel QQ-N-290	Brass	Nickel QQ-N-290
Coupling Nut	Brass	Nickel QQ-N-290	Brass	Nickel QQ-N-290

Environmental Specifications

Temperature

Operating Range -65 to +165 deg C

Compliance Certifications (see product page for current document)

Plotted and Other Data

Notes:

Click the following link (or enter part number in “SEARCH” on website) to obtain additional part information including price, inventory and certifications: SMA Male to HN Male Adapter ET12364

8th Floor, Building 1, Yongfu Science and Technology Center Industrial Park,
Nanzha District 5, Humen,523900, Dongguan, Guangdong, China.

Webstie:www.ebeestock.com Email:sales@ebeestock.com

© 2022 Ebeestock Enterprises All Rights Reserved

SMA Male to HN Male Adapter

RF Adapters Technical Data Sheet ET12364

SMA Male to HN Male Adapter from Ebeestock Enterprises has same day shipment for domestic and International orders. Our RF, microwave and millimeter wave products maintain a 99.4% availability and are part of the broadest selection in the industry.

Click the following link (or enter part number in “SEARCH” on website) to obtain additional part information including price, inventory and certifications: SMA Male to HN Male Adapter ET12364

URL: https://www.ebeestock.com/sma-male-to-hn-male-adapter-0012364

The information contained in this document is accurate to the best of our knowledge and representative of the part described herein. It may be necessary to make modifications to the part and/or the documentation of the part, in order to implement improvements. Ebeestock reserves the right to make such changes as required. Unless otherwise stated, all specifications are nominal. Ebeestock does not make any representation or warranty regarding the suitability of the part described herein for any particular purpose, and Ebeestock does not assume any liability arising out of the use of any part or documentation.

8th Floor, Building 1, Yongfu Science and Technology Center Industrial Park,
Nanzha District 5, Humen,523900, Dongguan, Guangdong, China.

Webstie:www.ebeestock.com Email:sales@ebeestock.com

© 2022 Ebeestock Enterprises All Rights Reserved

© 2022 Ebeestock Enterprises All Rights Reserved

www.ebeestock.com

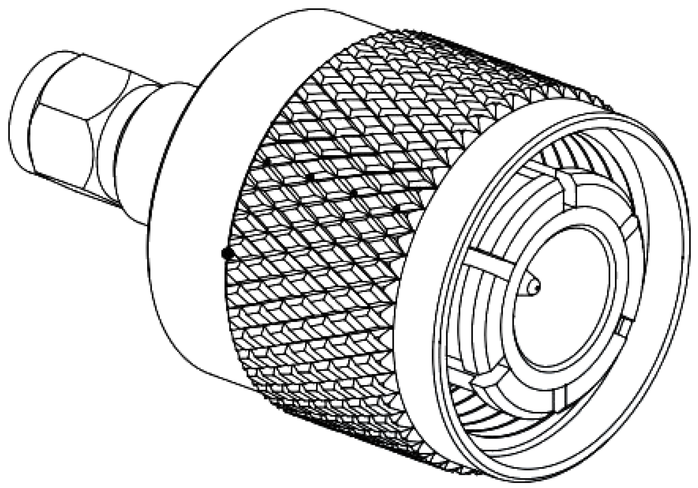

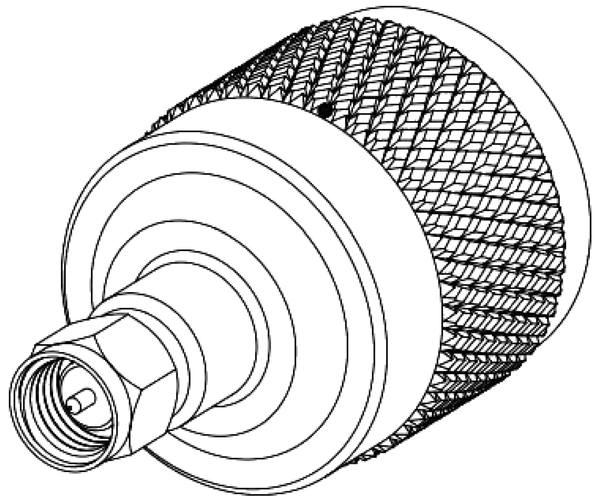

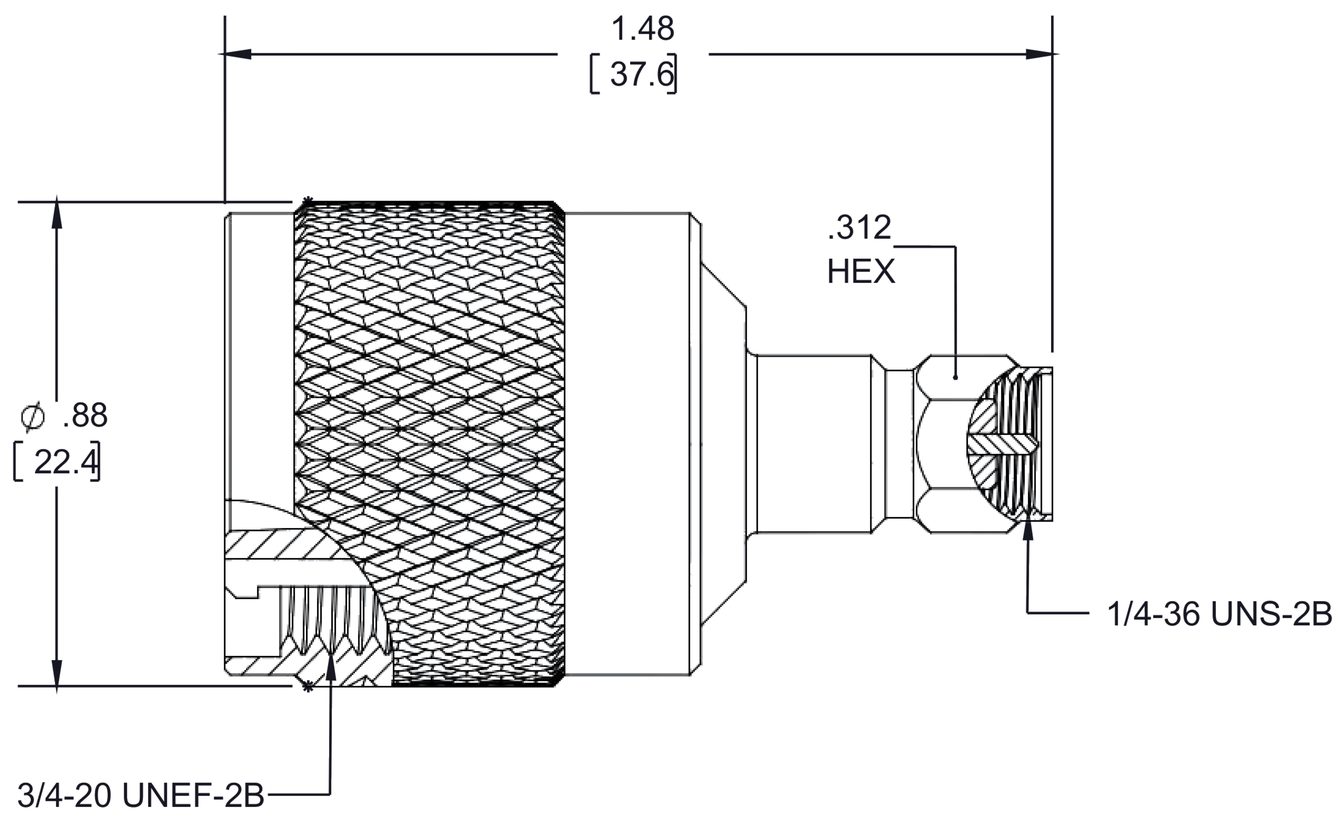

HN MALE **SMA MALE**

STANDARD TOLERANCES	
.X	±0.2
.XX	±0.01
.XXX	±0.005

*STANDARD TOLERANCES APPLY ONLY TO DIMENSIONS IN INCHES

ebeestock
Ebeestock.com
8th Floor, Building 1, Yongfu Science
and Technology Center Industrial Park,
Nanzha District 5, Humen,523900, Dongguan, Guangdong, China.
Webstie: www.ebeestock.com **Email:** sales@ebeestock.com

DWG TITLE

ET12364

NOTES:
1. UNLESS OTHERWISE SPECIFIED ALL DIMENSIONS ARE NOMINAL.
2. ALL SPECIFICATIONS ARE SUBJECT TO CHANGE WITHOUT NOTICE AT ANY TIME
3. DIMENSIONS ARE IN INCHES [mm].

CAGE CODE 53919	CAD FILE 102617	SCALE N/A	SIZE A	7361

© 2022 Ebeestock Enterprises All Rights Reserved