Bulkhead Mount Hermetically Sealed MHV Female to MHV Female Adapter

RF Adapters Technical Data Sheet

ET12406

Configuration

- MHV Female Connector 1
- MHV Female Connector 2
- 50 Ohms
- Straight Body Geometry
- Bulkhead Mount Method

Features

- Hermetically Sealed
- MHV Interface compliant with MIL-STD-348
- Silver Plated Contact
- Contact Plating per QQ-S-365

Applications

- General Purpose Test
- Vacuum Test Environment
- Rack Mounted Equipment

Description

Ebeestock's ET12406 bulkhead hermetically sealed MHV female to MHV female adapter is part of our full line of RF components available for same-day shipping. Our MHV to MHV adapter has a female to female gender configuration. This RF MHV bulkhead to MHV adapter allows designers to create external connections on their product enclosures, and can be used in a variety of other rack mount and panel mount applications. This hermetic MHV to MHV adapter prevents the leakage of gases, making it suitable for high pressure or vacuum applications or whenever an airtight seal is required.

RF adapters are often used to enable connections between two connector types that would otherwise not mate. Certain adapter configurations can also be used to protect connectors on expensive equipment where the number of connect/disconnect cycles is high. An RF, microwave or millimeter wave adapter is connected to the equipment, and the commonly changed connection is made with the adapter which can be easily replaced when it wears out after high usage; such adapters are referred to as connector savers. Ebeestock also offers bulkhead, panel mount, hermetically sealed, reverse polarity, and isolated ground adapter varieties to serve all of your RF, microwave and millimeter wave needs.

Mechanical Specifications

Size	
Length	1.433 in [36.4 mm]
Width	0.688 in [17.48 mm]
Weight	0.048 lbs [21.77 g]

Type	MHV Female	MHV Female
Polarity	Standard	Standard
Interface Specification	MIL-STD-348	MIL-STD-348
Connector Option	Hermetically Sealed	Hermetically Sealed

Click the following link (or enter part number in "SEARCH" on website) to obtain additional part information including price, inventory and certifications: Bulkhead Hermetically Sealed MHV Female to MHV Female Adapter ET12406

8th Floor, Building 1, Yongfu Science and Technology Center Industrial Park,
Nanzha District 5, Humen,523900, Dongguan, Guangdong, China.

Webstie:www.ebeestock.com Email:sales@ebeestock.com

© 2022 Ebeestock Enterprises All Rights Reserved

Bulkhead Mount Hermetically Sealed MHV Female to MHV Female Adapter

RF Adapters Technical Data Sheet ET12406

Material Specifications

Description	Connector 1 Material	Connector 1 Plating	Connector 2 Material	Connector 2 Plating
Type	MHV Female		MHV Female	
Contact		Silver QQ-S-365		Silver QQ-S-365
Insulation	PTFE		PTFE	
Outer Conductor	Brass	Nickel QQ-N-290	Brass	Nickel QQ-N-290

Environmental Specification Notes:
Pressure Rating: 50 PSI

Compliance Certifications (see product page for current document)

Bulkhead Hermetically Sealed MHV Female to MHV Female Adapter from Ebeestock Enterprises has same day shipment for domestic and International orders. Our RF, microwave and millimeter wave products maintain a 99% availability and are part of the broadest selection in the industry.

Click the following link (or enter part number in “SEARCH” on website) to obtain additional part information including price, inventory and certifications: Bulkhead Hermetically Sealed MHV Female to MHV Female Adapter ET12406

URL: https://www.ebeestock.com/bulkhead-mount-hermetically-sealed-mhv-female-to-mhv-female-adapter-0012406

The information contained in this document is accurate to the best of our knowledge and representative of the part described herein. It may be necessary to make modifications to the part and/or the documentation of the part, in order to implement improvements. Ebeestock reserves the right to make such changes as required. Unless otherwise stated, all specifications are nominal. Ebeestock does not make any representation or warranty regarding the suitability of the part described herein for any particular purpose, and Ebeestock does not assume any liability arising out of the use of any part or documentation.

8th Floor, Building 1, Yongfu Science and Technology Center Industrial Park,
Nanzha District 5, Humen,523900, Dongguan, Guangdong, China.

Webstie:www.ebeestock.com Email:sales@ebeestock.com

© 2022 Ebeestock Enterprises All Rights Reserved

ET12406 CAD Drawing

Bulkhead Hermetically Sealed MHV Female to MHV Female Adapter

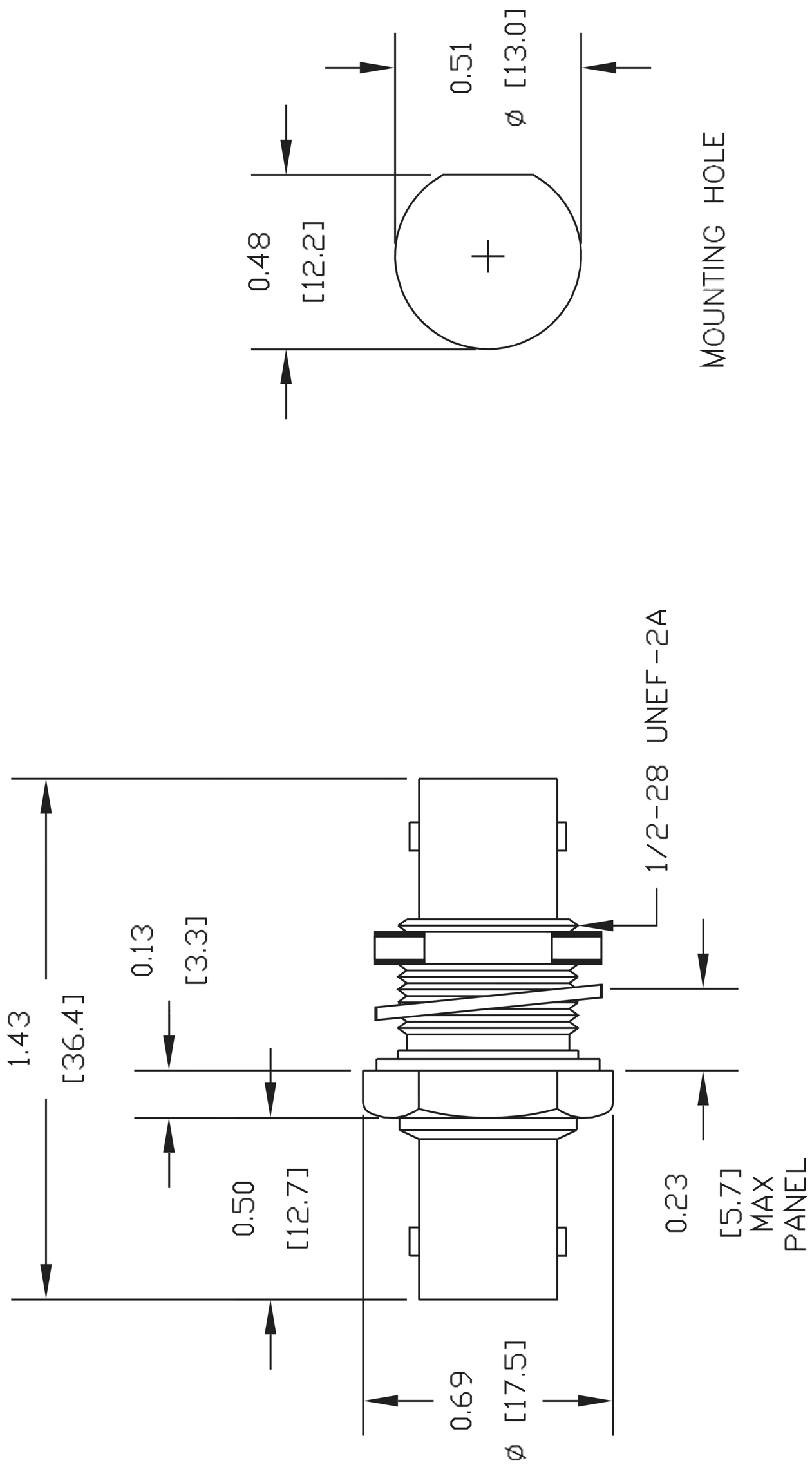

NOTES:
1. UNLESS OTHERWISE SPECIFIED ALL DIMENSIONS ARE NOMINAL.
2. ALL SPECIFICATIONS ARE SUBJECT TO CHANGE WITHOUT NOTICE AT ANY TIME.
3. DIMENSIONS ARE IN INCHES [mm].

DWG TITLE
ET12406

REV. A | FSCM NO. 53919 | CAD FILE 042110 | SCALE N/A | SIZE A | 127

ebeestock
Ebeestock.com
8th Floor, Building 1, Yongfu Science
and Technology Center Industrial Park,
Nanzha District 5, Humen,523900, Dongguan, Guangdong, China.
Webstie: www.ebeestock.com Email: sales@ebeestock.com

© 2022 Ebeestock Enterprises All Rights Reserved