MHV Male to SHV Plug Adapter

# RF Adapters Technical Data Sheet

**ET12409**

## Configuration

- MHV Male Connector 1
- SHV Plug Connector 2
- 50 Ohms
- Straight Body Geometry

## Features

- MHV Interface compliant with MIL-STD-348
- SHV Interface compliant with MIL-STD-348
- Silver Plated Contact
- Contact Plating per QQ-S-365

## Applications

- Allows Connection Between Series
- General Purpose Test

### Description

Ebeestock's ET12409 MHV male to SHV plug adapter is part of our full line of RF components available for same-day shipping. Our MHV to SHV adapter has a male to plug gender configuration.

RF adapters are often used to enable connections between two connector types that would otherwise not mate. Certain adapter configurations can also be used to protect connectors on expensive equipment where the number of connect/disconnect cycles is high. An RF, microwave or millimeter wave adapter is connected to the equipment, and the commonly changed connection is made with the adapter which can be easily replaced when it wears out after high usage; such adapters are referred to as connector savers. Ebeestock also offers bulkhead, panel mount, hermetically sealed, reverse polarity, and isolated ground adapter varieties to serve all of your RF, microwave and millimeter wave needs.

### Mechanical Specifications

**Size**

| | |
|---|---|
| Length | 1.61 in [40.89 mm] |
| Width | 0.57 in [14.48 mm] |
| Weight | 0.041 lbs [18.6 g] |

| Type | MHV Male | SHV Plug |
|---|---|---|
| Polarity | Standard | Standard |
| Interface Specification | MIL-STD-348 | MIL-STD-348 |

Click the following link (or enter part number in "SEARCH" on website) to obtain additional part information including price, inventory and certifications: MHV Male to SHV Plug Adapter ET12409

8th Floor, Building 1, Yongfu Science and Technology Center Industrial Park,
Nanzha District 5, Humen,523900, Dongguan, Guangdong, China.

Webstie:www.ebeestock.com Email:sales@ebeestock.com

© 2022 Ebeestock Enterprises All Rights Reserved

MHV Male to SHV Plug Adapter

# RF Adapters Technical Data Sheet ET12409

## Material Specifications

| Description | Connector 1 Material | Connector 1 Plating | Connector 2 Material | Connector 2 Plating |
|---|---|---|---|---|
| Type | MHV Male | | SHV Plug | |
| Contact | | Silver<br>QQ-S-365 | | Silver<br>QQ-S-365 |
| Insulation | PTFE | | PTFE | |
| Body | Brass | Nickel<br>QQ-N-290 | Brass | Nickel<br>QQ-N-290 |
| Coupling Nut | Brass | Nickel<br>QQ-N-290 | Brass | Nickel<br>QQ-N-290 |

**Compliance Certifications** (see product page for current document)

MHV Male to SHV Plug Adapter from Ebeestock Enterprises has same day shipment for domestic and International orders. Our RF, microwave and millimeter wave products maintain a 99% availability and are part of the broadest selection in the industry.

Click the following link (or enter part number in “SEARCH” on website) to obtain additional part information including price, inventory and certifications: MHV Male to SHV Plug Adapter ET12409

**URL:** https://www.ebeestock.com/mhv-male-to-shv-plug-adapter-0012409

The information contained in this document is accurate to the best of our knowledge and representative of the part described herein. It may be necessary to make modifications to the part and/or the documentation of the part, in order to implement improvements. Ebeestock reserves the right to make such changes as required. Unless otherwise stated, all specifications are nominal. Ebeestock does not make any representation or warranty regarding the suitability of the part described herein for any particular purpose, and Ebeestock does not assume any liability arising out of the use of any part or documentation.



© 2022 Ebeestock Enterprises All Rights Reserved

# ET12409 CAD Drawing

MHV Male to SHV Plug Adapter

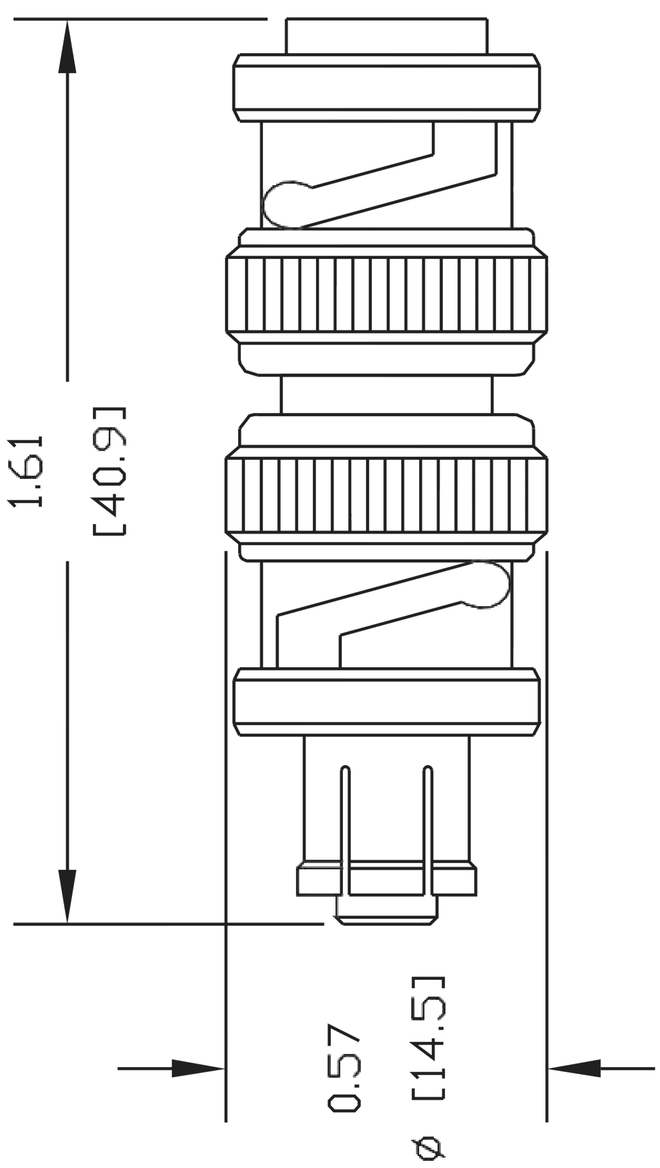


NOTES:
1. UNLESS OTHERWISE SPECIFIED ALL DIMENSIONS ARE NOMINAL.
2. ALL SPECIFICATIONS ARE SUBJECT TO CHANGE WITHOUT NOTICE AT ANY TIME.
3. DIMENSIONS ARE IN INCHES [mm].

DWG TITLE
ET12409

REV. -

FSCM NO. 53919

CAD FILE 091702

SCALE N/A

SIZE A

127

ebeestock
Ebeestock.com
8th Floor, Building 1, Yongfu Science
and Technology Center Industrial Park,
Nanzha District 5, Humen,523900, Dongguan, Guangdong, China.
Webstie: www.ebeestock.com Email: sales@ebeestock.com

© 2022 Ebeestock Enterprises All Rights Reserved