Snap-On QMA Male to SMA Male Snap-On Adapter

RF Adapters Technical Data Sheet

ET12600

Configuration

- Snap-On QMA Male Connector 1
- Snap-On SMA Male Connector 2
- 50 Ohm
- Straight Body Geometry

Features

- Max VSWR of 1.18:1 up to 6 GHz
- 51µ in. minimum contact plating
- Gold Plated Brass Contact

Applications

- Allows Connection Between Series
- General Purpose Test

Description

Ebeestock's ET12600 snap-on QMA male to SMA male snap-on adapter is part of our full line of RF components available for same-day shipping. Our QMA to SMA adapter has a male to male gender configuration. ET12600 QMA male to SMA male adapter operates to 6 GHz. The Ebeestock RF adapter provides excellent VSWR of 1.18:1 maximum.

RF adapters are often used to enable connections between two connector types that would otherwise not mate. Certain adapter configurations can also be used to protect connectors on expensive equipment where the number of connect/disconnect cycles is high. An RF, microwave or millimeter wave adapter is connected to the equipment, and the commonly changed connection is made with the adapter which can be easily replaced when it wears out after high usage; such adapters are referred to as connector savers. Ebeestock also offers bulkhead, panel mount, hermetically sealed, reverse polarity, and isolated ground adapter varieties to serve all of your RF, microwave and millimeter wave needs.

Electrical Specifications

Description	Minimum	Typical	Maximum	Units
Frequency Range	DC		6	GHz
VSWR			1.18:1	
Insertion Loss			0.17	dB
Operating Voltage (AC)			500	Vrms
Dielectric Withstanding Voltage (AC)			1,000	Vrms
Insulation Resistance	5,000			MOhms
RF Leakage			70	dB

Mechanical Specifications

Size

Length	1.05 in [26.67 mm]
Width	0.41 in [10.41 mm]
Weight	0.021 lbs [9.53 g]

Click the following link (or enter part number in "SEARCH" on website) to obtain additional part information including price, inventory and certifications: Snap-On QMA Male to SMA Male Snap-On Adapter ET12600

8th Floor, Building 1, Yongfu Science and Technology Center Industrial Park,
Nanzha District 5, Humen,523900, Dongguan, Guangdong, China.

Webstie:www.ebeestock.com Email:sales@ebeestock.com

© 2022 Ebeestock Enterprises All Rights Reserved

Snap-On QMA Male to SMA Male Snap-On Adapter

RF Adapters Technical Data Sheet ET12600

Description	Connector 1	Connector 2
Type	QMA Male	SMA Male
Polarity	Standard	Standard
Mating Cycles	100	100
Contact Captivation Axial Force, Min	6.07 lbs [2.75 kg]	6.07 lbs [2.75 kg]
Contact Captivation Torque, Min	0.63 in-lbs [0.07 Nm]	0.63 in-lbs [0.07 Nm]

Material Specifications

Description	Connector 1 Material	Connector 1 Plating	Connector 2 Material	Connector 2 Plating
Type	Snap-On QMA Male		Snap-On SMA Male	
Contact	Brass	Gold 51µ in. minimum	Brass	Gold 51µ in. minimum
Insulation	PTFE		PTFE	
Body	Brass	Tri-Metal	Brass	Tri-Metal
Coupling Nut	Brass	Tri-Metal	Brass	Tri-Metal

Environmental Specifications

Temperature

Operating Range -40 to +80 ºC

Compliance Certifications (see product page for current document)

Plotted and Other Data

Notes:

Click the following link (or enter part number in “SEARCH” on website) to obtain additional part information including price, inventory and certifications: Snap-On QMA Male to SMA Male Snap-On Adapter ET12600

8th Floor, Building 1, Yongfu Science and Technology Center Industrial Park,
Nanzha District 5, Humen,523900, Dongguan, Guangdong, China.

Webstie:www.ebeestock.com Email:sales@ebeestock.com

© 2022 Ebeestock Enterprises All Rights Reserved

Snap-On QMA Male to SMA Male Snap-On Adapter

RF Adapters Technical Data Sheet ET12600

Snap-On QMA Male to SMA Male Snap-On Adapter from Ebeestock Enterprises has same day shipment for domestic and International orders. Our RF, microwave and millimeter wave products maintain a 99.4% availability and are part of the broadest selection in the industry.

Click the following link (or enter part number in “SEARCH” on website) to obtain additional part information including price, inventory and certifications: Snap-On QMA Male to SMA Male Snap-On Adapter ET12600

URL: https://www.ebeestock.com/snap-on-qma-male-to-sma-male-snap-on-adapter-0012600

The information contained in this document is accurate to the best of our knowledge and representative of the part described herein. It may be necessary to make modifications to the part and/or the documentation of the part, in order to implement improvements. Ebeestock reserves the right to make such changes as required. Unless otherwise stated, all specifications are nominal. Ebeestock does not make any representation or warranty regarding the suitability of the part described herein for any particular purpose, and Ebeestock does not assume any liability arising out of the use of any part or documentation.

8th Floor, Building 1, Yongfu Science and Technology Center Industrial Park,
Nanzha District 5, Humen,523900, Dongguan, Guangdong, China.

Webstie:www.ebeestock.com Email:sales@ebeestock.com

© 2022 Ebeestock Enterprises All Rights Reserved

ET12600 CAD Drawing

Snap-On QMA Male to SMA Male Snap-On Adapter

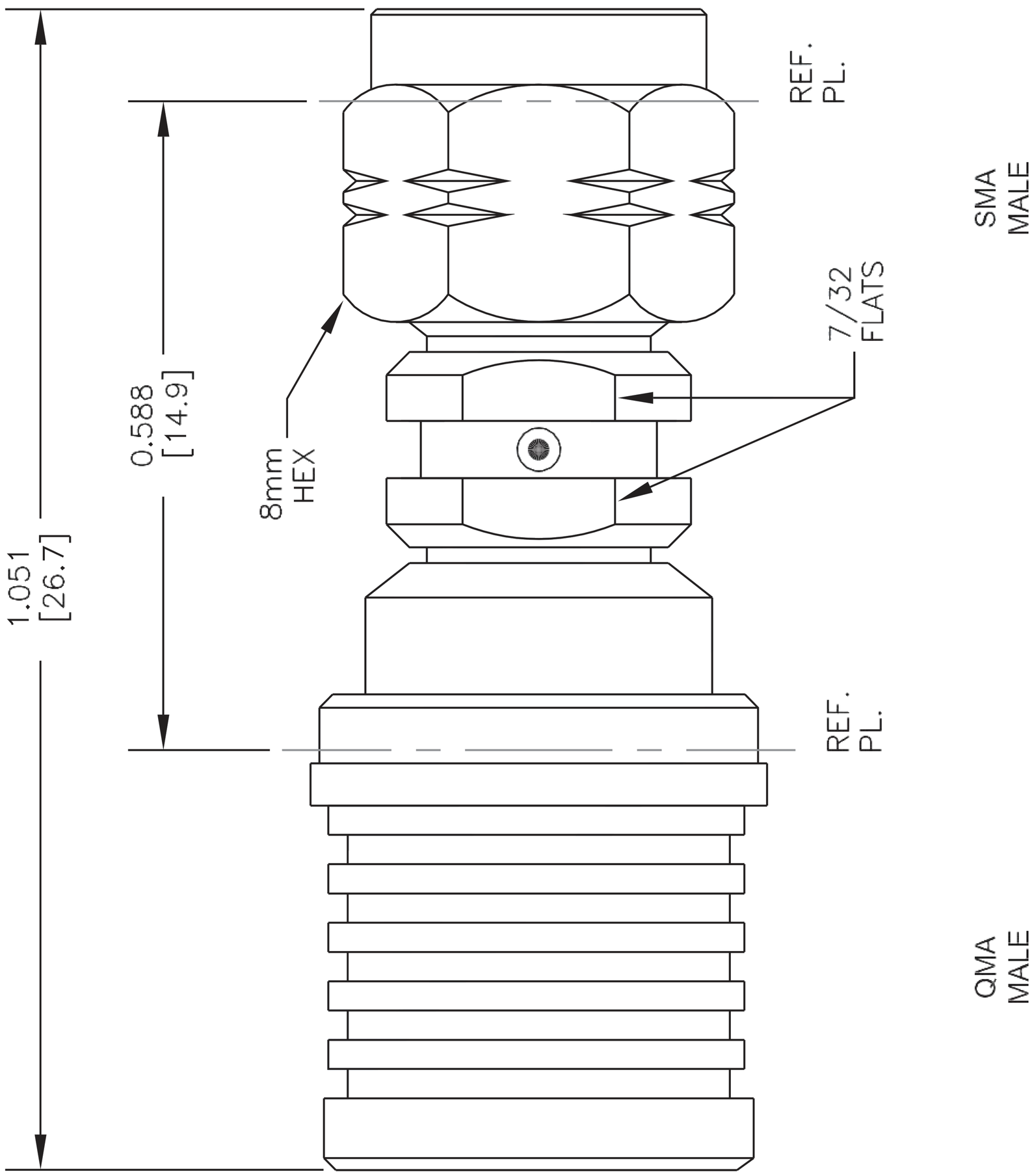

NOTES:
1. UNLESS OTHERWISE SPECIFIED ALL DIMENSIONS ARE NOMINAL.
2. ALL SPECIFICATIONS ARE SUBJECT TO CHANGE WITHOUT NOTICE AT ANY TIME.
3. DIMENSIONS ARE IN INCHES [mm].

DWG TITLE
ET12600

FSCM NO. 53919

CAD FILE 050916

SCALE N/A

SIZE A

2233

ebeestock
Ebeestock.com
8th Floor, Building 1, Yongfu Science
and Technology Center Industrial Park,
Nanzha District 5, Humen,523900, Dongguan, Guangdong, China.
Webstie: www.ebeestock.com Email: sales@ebeestock.com

© 2022 Ebeestock Enterprises All Rights Reserved