SMA Male to TNC Female Adapter

RF Adapters Technical Data Sheet

ET12622

Configuration

- SMA Male Connector 1
- TNC Female Connector 2
- 50 Ohms
- Straight Body Geometry

Features

- Max VSWR of 1.3:1 up to 11 GHz
- SMA and TNC Interface compliant with MIL-STD-348A
- Gold Plated Beryllium Copper Contact
- 50 µ-in min. Gold Contact Plating

Applications

- Allows Connection Between Series
- General Purpose Test

Description

Ebeestock's ET12622 SMA male to TNC female adapter is part of our full line of RF components available for same-day shipping. The SMA connector mates mechanically with commercially available 3.5mm and 2.92mm (K) connectors. Our SMA to TNC adapter has a male to female gender configuration. ET12622 SMA male to TNC female adapter operates to 11 GHz. The Ebeestock RF adapter provides good VSWR of 1.3:1 maximum.

RF adapters are often used to enable connections between two connector types that would otherwise not mate. Certain adapter configurations can also be used to protect connectors on expensive equipment where the number of connect/disconnect cycles is high. An RF, microwave or millimeter wave adapter is connected to the equipment, and the commonly changed connection is made with the adapter which can be easily replaced when it wears out after high usage; such adapters are referred to as connector savers. Ebeestock also offers bulkhead, panel mount, hermetically sealed, reverse polarity, and isolated ground adapter varieties to serve all of your RF, microwave and millimeter wave needs.

Electrical Specifications

Frequency Range	DC	11	GHz
VSWR		1.3:1	
Operating Voltage (AC)		500	Vrms

Mechanical Specifications

Size

Length	1.03 in [26.16 mm]
Width	0.5 in [12.7 mm]
Height	0.5 in [12.7 mm]
Weight	0.025 lbs [11.34 g]

Click the following link (or enter part number in "SEARCH" on website) to obtain additional part information including price, inventory and certifications: SMA Male to TNC Female Adapter ET12622

8th Floor, Building 1, Yongfu Science and Technology Center Industrial Park,
Nanzha District 5, Humen,523900, Dongguan, Guangdong, China.

Webstie:www.ebeestock.com Email:sales@ebeestock.com

© 2022 Ebeestock Enterprises All Rights Reserved

SMA Male to TNC Female Adapter

RF Adapters Technical Data Sheet ET12622

Description	Connector 1	Connector 2
Type	SMA Male	TNC Female
Polarity	Standard	Standard
Interface Specification	MIL-STD-348A	MIL-STD-348A
Hex Size	5/16 in.	
Mating Torque	3 to 5 in-lbs [0.34 to 0.57 Nm]	

Material Specifications

Description	Connector 1 Material	Connector 1 Plating	Connector 2 Material	Connector 2 Plating
Type	SMA Male		TNC Female	
Contact	Beryllium Copper	Gold 50µ in. minimum	Beryllium Copper	Gold 50µ in. minimum
Insulation	PTFE		PTFE	
Outer Conductor	Passivated Stainless Steel			
Body	Passivated Stainless Steel			
Gasket	Silicone			
Coupling Nut	Brass	Nickel 100µ in. minimum		

Environmental Specifications

Temperature

Operating Range -65 to +165 deg C

Compliance Certifications (see product page for current document)

Plotted and Other Data

Notes:

Click the following link (or enter part number in “SEARCH” on website) to obtain additional part information including price, inventory and certifications: SMA Male to TNC Female Adapter ET12622

8th Floor, Building 1, Yongfu Science and Technology Center Industrial Park,
Nanzha District 5, Humen,523900, Dongguan, Guangdong, China.

Webstie:www.ebeestock.com Email:sales@ebeestock.com

© 2022 Ebeestock Enterprises All Rights Reserved

SMA Male to TNC Female Adapter

RF Adapters Technical Data Sheet ET12622

SMA Male to TNC Female Adapter from Ebeestock Enterprises has same day shipment for domestic and International orders. Our RF, microwave and millimeter wave products maintain a 99% availability and are part of the broadest selection in the industry.

Click the following link (or enter part number in “SEARCH” on website) to obtain additional part information including price, inventory and certifications: SMA Male to TNC Female Adapter ET12622

URL: https://www.ebeestock.com/sma-male-to-tnc-female-adapter-0012622

The information contained in this document is accurate to the best of our knowledge and representative of the part described herein. It may be necessary to make modifications to the part and/or the documentation of the part, in order to implement improvements. Ebeestock reserves the right to make such changes as required. Unless otherwise stated, all specifications are nominal. Ebeestock does not make any representation or warranty regarding the suitability of the part described herein for any particular purpose, and Ebeestock does not assume any liability arising out of the use of any part or documentation.

8th Floor, Building 1, Yongfu Science and Technology Center Industrial Park,
Nanzha District 5, Humen,523900, Dongguan, Guangdong, China.

Webstie:www.ebeestock.com Email:sales@ebeestock.com

© 2022 Ebeestock Enterprises All Rights Reserved

ET12622 CAD Drawing

SMA Male to TNC Female Adapter

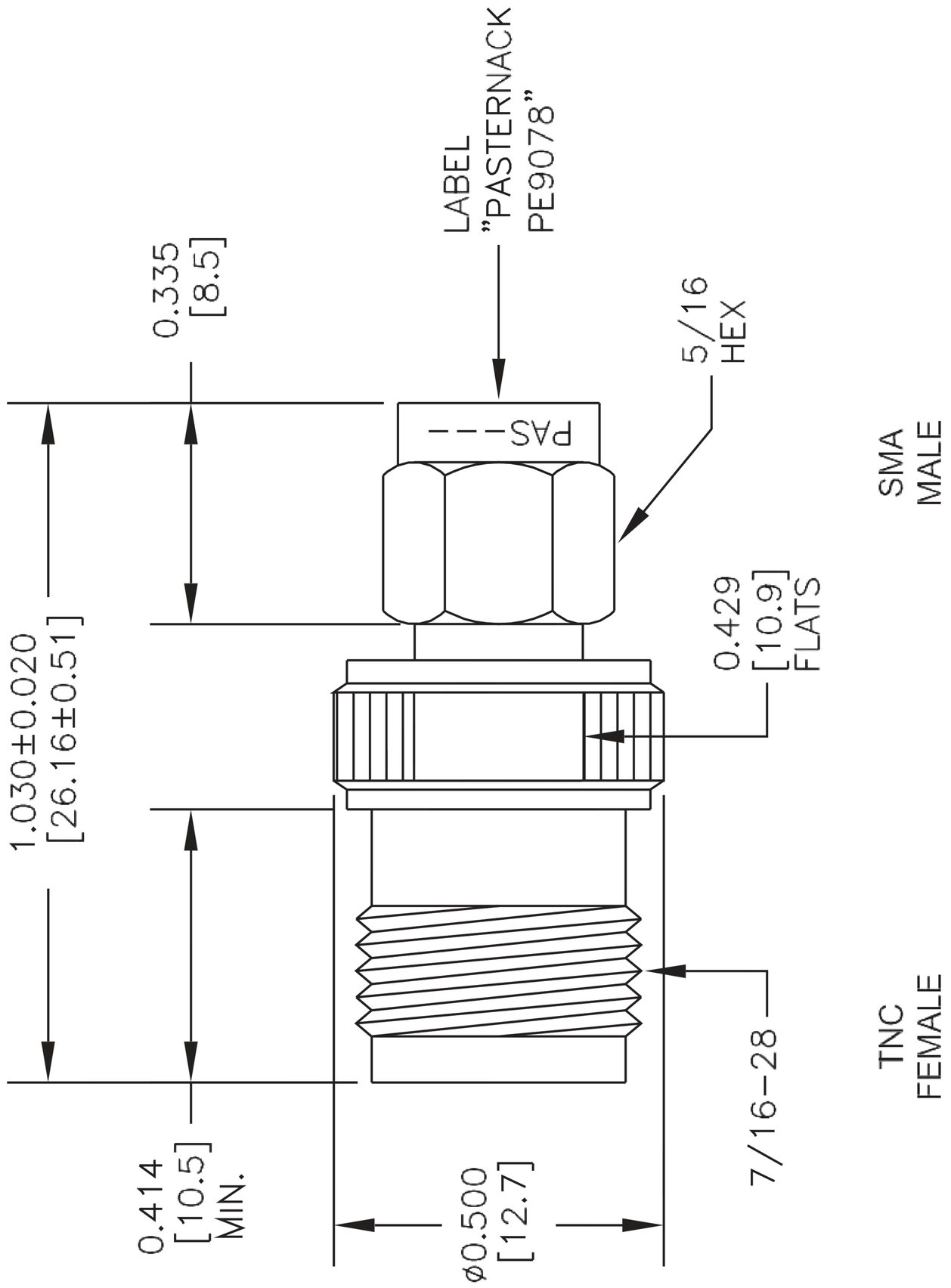

STANDARD TOLERANCES	
.X	±0.2
.XX	±0.1
.XXX	±0.05

*STANDARD TOLERANCES APPLY ONLY TO DIMENSIONS IN INCHES

NOTES:
1. UNLESS OTHERWISE SPECIFIED ALL DIMENSIONS ARE NOMINAL.
2. ALL SPECIFICATIONS ARE SUBJECT TO CHANGE WITHOUT NOTICE AT ANY TIME.
3. DIMENSIONS ARE IN INCHES [mm].

DWG TITLE
ET12622

FSCM NO. 53919

CAD FILE 071516

SCALE N/A

SIZE A

2233

ebeestock
Ebeestock.com
8th Floor, Building 1, Yongfu Science and Technology Center Industrial Park, Nanzha District 5, Humen,523900, Dongguan, Guangdong, China.
Webstie: www.ebeestock.com Email: sales@ebeestock.com

© 2022 Ebeestock Enterprises All Rights Reserved