SMA Female to SMP Male Smooth Bore Adapter

TECHNICAL DATA SHEET ET12665

Configuration	
Connector 1	SMA Female
Impedance 1	50 Ohms
Connector 2	Smooth Bore SMP Male
Impedance 2	50 Ohms
Adapter Design	Standard
Body Style	Straight
Electrical Specifications	
Frequency Range	DC to 18 GHz
Maximum VSWR	1.2:1
Mechanical Specifications	
Size	
Length, in [mm]	0.905 [22.99]
Width/Dia., in [mm]	0.354331 [9]
Connector 1	
Type	SMA Female
Inner Conductor Material and Plating	Beryllium Copper, Gold
Body Material and Plating	Passivated Stainless Steel
Dielectric Type	PTFE
Connector 2	
Type	Smooth Bore SMP Male
Inner Conductor Material and Plating	Beryllium Copper, Gold
Body Material and Plating	Passivated Stainless Steel
Dielectric Type	PTFE
Environmental Specifications	
Temperature	
Operating Range	-45 to +120 deg C
Compliance Certifications (visit for current document)	RoHS Compliant
REACH Compliant	06/06/2014

Click the following link (or enter part number in “SEARCH” on website) to obtain additional part information including price, inventory and certifications: SMA Female to SMP Male Smooth Bore Adapter ET12665

8th Floor, Building 1, Yongfu Science and Technology Center Industrial Park,
Nanzha District 5, Humen,523900, Dongguan, Guangdong, China.

Webstie:www.ebeestock.com Email:sales@ebeestock.com

© 2022 Ebeestock Enterprises All Rights Reserved

SMA Female to SMP Male Smooth Bore Adapter

TECHNICAL DATA SHEET ET12665

Plotted and Other Data

Notes:

- Values at +25 °C, sea level

SMA Female to SMP Male Smooth Bore Adapter from Ebeestock Enterprises has same day shipment for domestic and International orders. Our RF, microwave and millimeter wave products maintain a 99% availability and are part of the broadest selection in the industry.

Click the following link (or enter part number in “SEARCH” on website) to obtain additional part information including price, inventory and certifications: SMA Female to SMP Male Smooth Bore Adapter ET12665

URL: https://www.ebeestock.com/sma-female-to-smp-male-smooth-bore-adapter-0012665

The information contained in this document is accurate to the best of our knowledge and representative of the part described herein. It may be necessary to make modifications to the part and/or the documentation of the part, in order to implement improvements. Ebeestock reserves the right to make such changes as required. Unless otherwise stated, all specifications are nominal. Ebeestock does not make any representation or warranty regarding the suitability of the part described herein for any particular purpose, and Ebeestock does not assume any liability arising out of the use of any part or documentation.

8th Floor, Building 1, Yongfu Science and Technology Center Industrial Park,
Nanzha District 5, Humen,523900, Dongguan, Guangdong, China.

Webstie:www.ebeestock.com Email:sales@ebeestock.com

© 2022 Ebeestock Enterprises All Rights Reserved

ET12665 CAD Drawing

SMA Female to SMP Male Smooth Bore Adapter

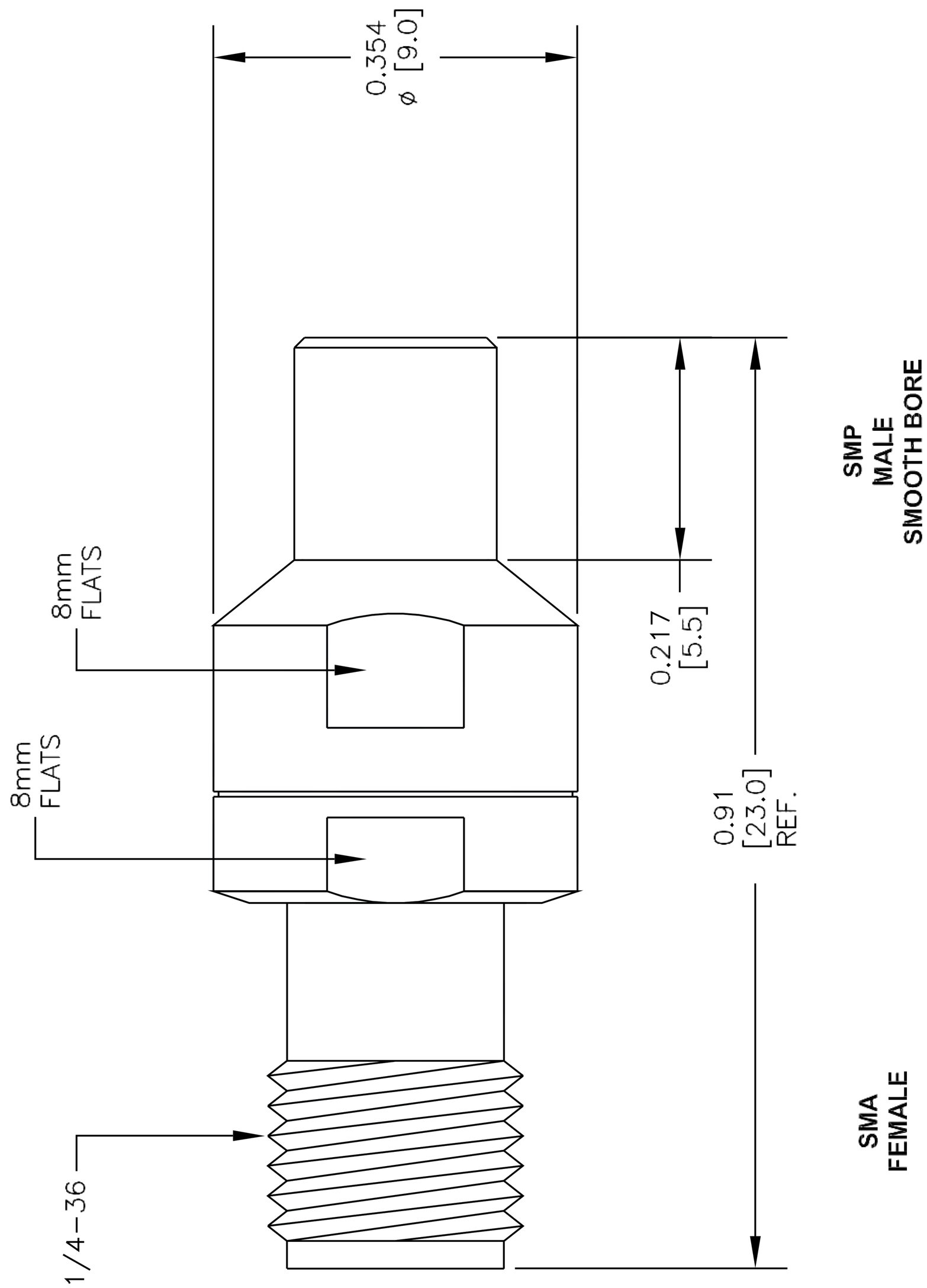

NOTES:
1. UNLESS OTHERWISE SPECIFIED ALL DIMENSIONS ARE NOMINAL.
2. ALL SPECIFICATIONS ARE SUBJECT TO CHANGE WITHOUT NOTICE AT ANY TIME.
3. DIMENSIONS ARE IN INCHES [mm].

DWG TITLE
ET12665

FSCM NO. 53919

CAD FILE 122914

SCALE N/A

SIZE A

150

ebeestock
Ebeestock.com
8th Floor, Building 1, Yongfu Science
and Technology Center Industrial Park,
Nanzha District 5, Humen,523900, Dongguan, Guangdong, China.
Webstie: www.ebeestock.com Email: sales@ebeestock.com

© 2022 Ebeestock Enterprises All Rights Reserved