SMA Male to SMA Female Radius Right Angle Gold Plated Stainless Steel Adapter

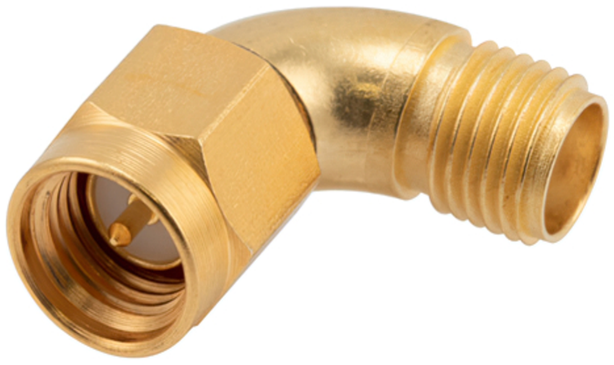

RF Adapters Technical Data Sheet

ET12690

Configuration

- SMA Male Connector 1
- SMA Female Connector 2
- 50 Ohm
- Radius Right Angle Body Geometry

Features

- Max VSWR of 1.2:1 up to 18 GHz
- 30 µin contact plating
- Gold Plated Beryllium Copper Contact

Applications

- General Purpose Test

Description

Ebeestock's ET12690 SMA male to SMA female radius right angle adapter is part of our full line of RF components available for same-day shipping. The SMA connector mates mechanically with commercially available 3.5mm and 2.92mm (K) connectors. Our SMA to SMA adapter has a male to female gender configuration built of durable stainless steel. ET12690 SMA male to SMA female adapter is gold plated and operates to 18 GHz. The Ebeestock RF adapter provides excellent VSWR of 1.2:1 maximum. This radius right angle SMA to SMA adapter allows for easier connections in tight spaces.

RF adapters are often used to enable connections between two connector types that would otherwise not mate. Certain adapter configurations can also be used to protect connectors on expensive equipment where the number of connect/disconnect cycles is high. An RF, microwave or millimeter wave adapter is connected to the equipment, and the commonly changed connection is made with the adapter which can be easily replaced when it wears out after high usage; such adapters are referred to as connector savers. Ebeestock also offers bulkhead, panel mount, hermetically sealed, reverse polarity, and isolated ground adapter varieties to serve all of your RF, microwave and millimeter wave needs.

Electrical Specifications

Description	Minimum	Typical	Maximum	Units
Frequency Range	DC		18	GHz
VSWR			1.2:1	

Electrical Specification Notes:
Values at 25°C, sea level.

Mechanical Specifications

Size

Length	0.6 in [15.24 mm]
Width	0.3 in [7.62 mm]
Height	0.5 in [12.7 mm]

Click the following link (or enter part number in "SEARCH" on website) to obtain additional part information including price, inventory and certifications: SMA Male to SMA Female Radius Right Angle Gold Plated Stainless Steel Adapter ET12690

8th Floor, Building 1, Yongfu Science and Technology Center Industrial Park,
Nanzha District 5, Humen,523900, Dongguan, Guangdong, China.

Webstie:www.ebeestock.com Email:sales@ebeestock.com

© 2022 Ebeestock Enterprises All Rights Reserved

SMA Male to SMA Female Radius Right Angle Gold Plated Stainless Steel Adapter

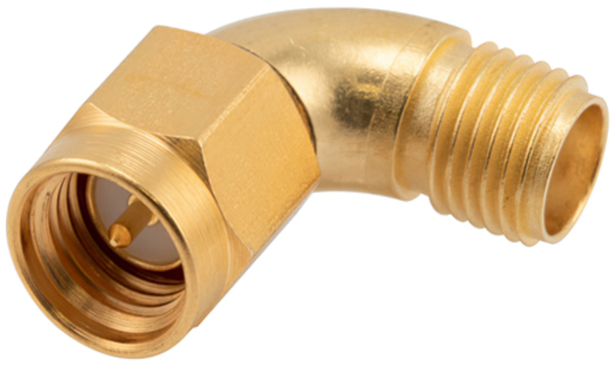

RF Adapters Technical Data Sheet

ET12690

Description	Connector 1	Connector 2
Type	SMA Male	SMA Female
Polarity	Standard	Standard

Material Specifications

Description	Connector 1 Material	Connector 1 Plating	Connector 2 Material	Connector 2 Plating
Type	SMA Male		SMA Female	
Contact	Beryllium Copper	Gold 30 µin	Beryllium Copper	Gold 30 µin
Insulation	PTFE		PTFE	
Outer Conductor			Stainless Steel	Gold 3 µin
Body	Stainless Steel	Gold 3 µin	Stainless Steel	Gold 30 µin
Gasket	Silicone Rubber		Silicone Rubber	
Coupling Nut	Stainless Steel	Gold 3 µin		

Environmental Specifications

Temperature

Operating Range -55 to +125 ºC

Compliance Certifications (see product page for current document)

Plotted and Other Data

Notes:

Click the following link (or enter part number in “SEARCH” on website) to obtain additional part information including price, inventory and certifications: SMA Male to SMA Female Radius Right Angle Gold Plated Stainless Steel Adapter ET12690

8th Floor, Building 1, Yongfu Science and Technology Center Industrial Park,
Nanzha District 5, Humen,523900, Dongguan, Guangdong, China.

Webstie:www.ebeestock.com Email:sales@ebeestock.com

© 2022 Ebeestock Enterprises All Rights Reserved

SMA Male to SMA Female Radius Right Angle Gold Plated Stainless Steel Adapter

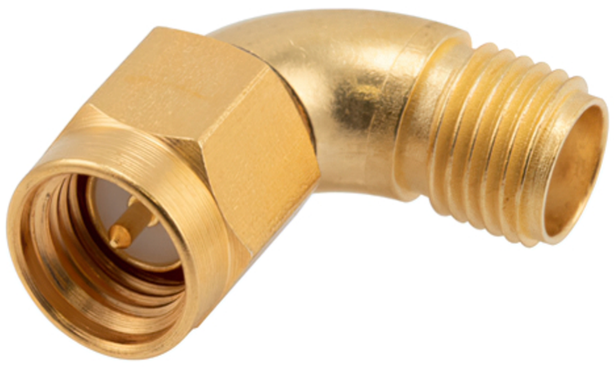

RF Adapters Technical Data Sheet ET12690

SMA Male to SMA Female Radius Right Angle Gold Plated Stainless Steel Adapter from Ebeestock Enterprises has same day shipment for domestic and International orders. Our RF, microwave and millimeter wave products maintain a 99.4% availability and are part of the broadest selection in the industry.

Click the following link (or enter part number in “SEARCH” on website) to obtain additional part information including price, inventory and certifications: SMA Male to SMA Female Radius Right Angle Gold Plated Stainless Steel Adapter ET12690

URL: https://www.ebeestock.com/sma-male-to-sma-female-radius-right-angle-gold-plated-stainless-steel-adapter-0012690

The information contained in this document is accurate to the best of our knowledge and representative of the part described herein. It may be necessary to make modifications to the part and/or the documentation of the part, in order to implement improvements. Ebeestock reserves the right to make such changes as required. Unless otherwise stated, all specifications are nominal. Ebeestock does not make any representation or warranty regarding the suitability of the part described herein for any particular purpose, and Ebeestock does not assume any liability arising out of the use of any part or documentation.

8th Floor, Building 1, Yongfu Science and Technology Center Industrial Park,
Nanzha District 5, Humen,523900, Dongguan, Guangdong, China.

Webstie:www.ebeestock.com Email:sales@ebeestock.com

© 2022 Ebeestock Enterprises All Rights Reserved

© 2022 Ebeestock Enterprises All Rights Reserved

www.ebeestock.com

REVISIONS			
REV.	DESCRIPTION	DATE	APPROVED
A	INITIAL RELEASE	03/18/19	S.ELLIS

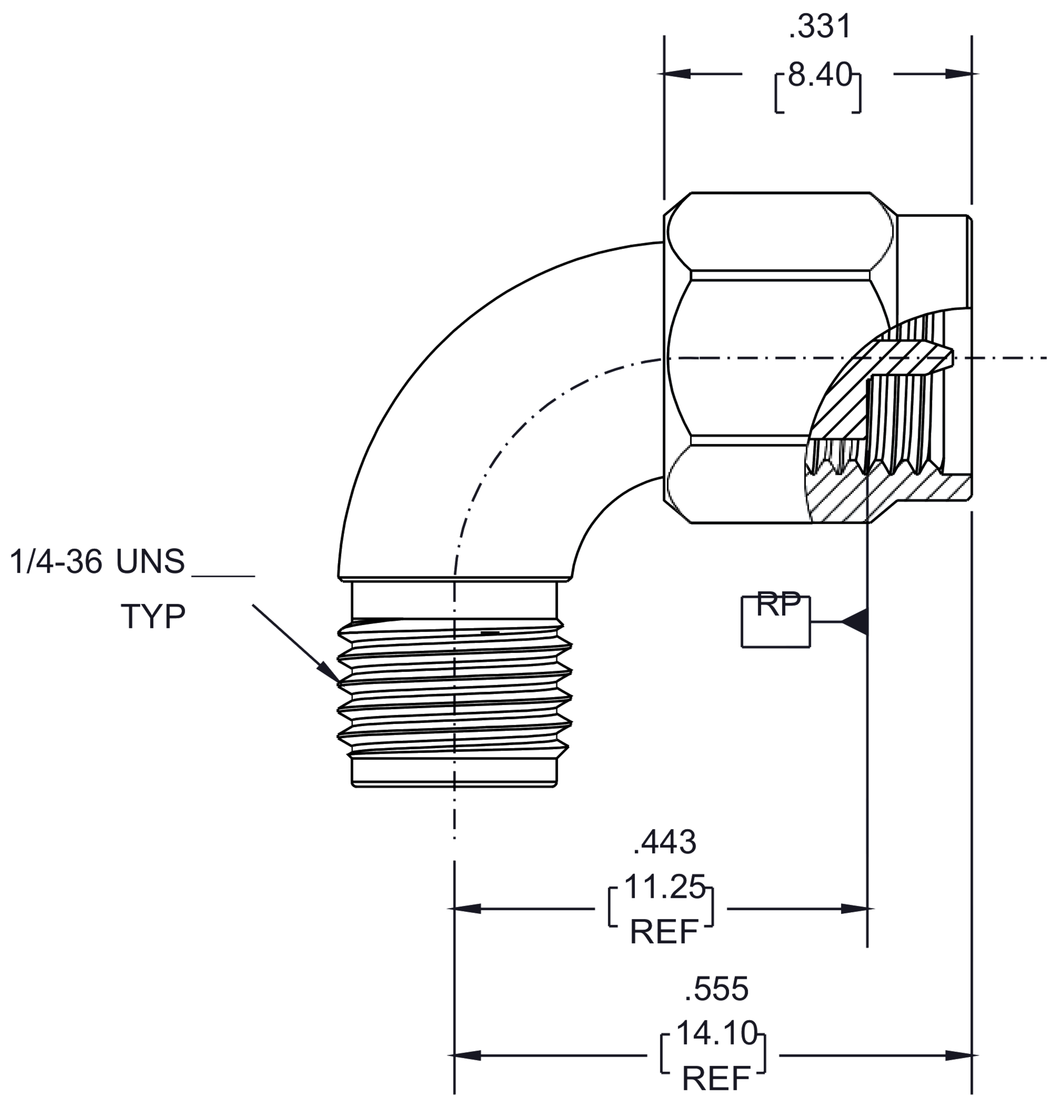

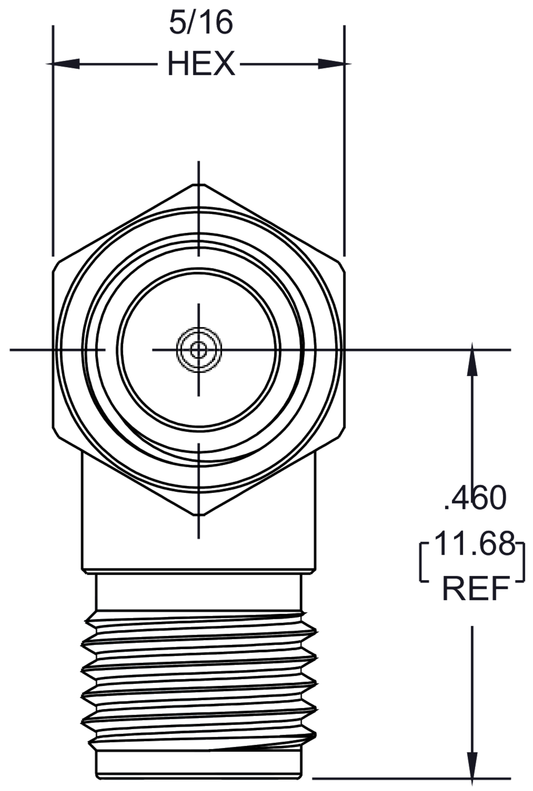

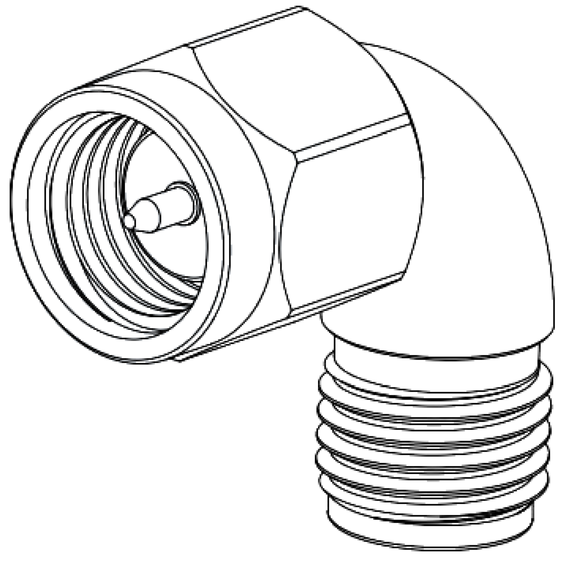

UNLESS OTHERWISE SPECIFIED
LEADING DIMENSIONS ARE INCHES
DIMENSIONS IN [ ] ARE MILLIMETERS

TOLERANCES:

.X=± .2	[5.08]	FRACTIONS
.XX=± .01	[.25]	± 1/32
.XXX=± .005	[.13]	ANGLES ± 1°

ALL DIMENSIONS SHOWN
ARE FOR REFERENCE ONLY.

THIRD-ANGLE PROJECTION

ebeestock
Ebeestock.com
8th Floor, Building 1, Yongfu Science
and Technology Center Industrial Park,
Nanzha District 5, Humen,523900, Dongguan, Guangdong, China.
Webstie: www.ebeestock.com **Email:** sales@ebeestock.com
e-mail: sales@Ebeestock.com

THE INFORMATION AND DESIGN IN THIS DOCUMENT IS THE PROPERTY OF Ebeestock CORPORATION. ALL RIGHTS RESERVED.

SHEET	OF
1	1

SCALE N/A

SIZE	CAGE	DRAWN BY	PART NUMBER	REV
A	53919	K.DANG	ET12690	A

THESE COMMODITIES, TECHNOLOGY OR SOFTWARE WERE EXPORTED FROM THE UNITED STATES IN ACCORDANCE WITH THE EXPORT ADMINISTRATION REGULATIONS. DIVERSION CONTRARY TO U.S. LAW PROHIBITED.

T-Rev.B