SMA Male to SMA Male Miter Right Angle Adapter, 27 GHz

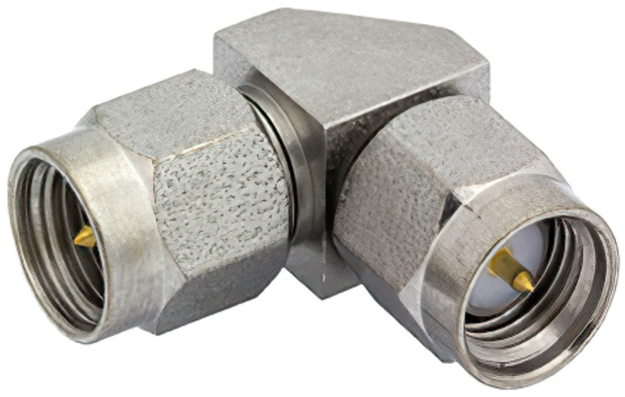

RF Adapters Technical Data Sheet

ET12748

Configuration

- SMA Male Connector 1
- SMA Male Connector 2
- 50 Ohm
- Miter Right Angle Body Geometry

Features

- Max VSWR of 1.35:1 up to 27 GHz
- Contact plating according to MIL-G-45204
- Gold over Nickel Plated Beryllium Copper Contact

Applications

- General Purpose Test

Description

Ebeestock's ET12748 SMA male to SMA male miter right angle adapter is part of our full line of RF components available for same-day shipping. The SMA connector mates mechanically with commercially available 3.5mm and 2.92mm (K) connectors. Our SMA to SMA adapter has a male to male gender configuration built of durable stainless steel. ET12748 SMA male to SMA male adapter operates to 27 GHz. The Ebeestock RF adapter provides good VSWR of 1.35:1 maximum. This miter right angle SMA to SMA adapter allows for easier connections in tight spaces.

RF adapters are often used to enable connections between two connector types that would otherwise not mate. Certain adapter configurations can also be used to protect connectors on expensive equipment where the number of connect/disconnect cycles is high. An RF, microwave or millimeter wave adapter is connected to the equipment, and the commonly changed connection is made with the adapter which can be easily replaced when it wears out after high usage; such adapters are referred to as connector savers. Ebeestock also offers bulkhead, panel mount, hermetically sealed, reverse polarity, and isolated ground adapter varieties to serve all of your RF, microwave and millimeter wave needs.

Electrical Specifications

Frequency Range	DC	27	GHz
VSWR		1.35:1	

Electrical Specification Notes:
Values at 25°C, sea level.

Mechanical Specifications

Size

Length	0.517 in [13.13 mm]
Width	0.312 in [7.92 mm]
Height	0.545 in [13.84 mm]
Weight	0.0173 lbs [7.85 g]

Click the following link (or enter part number in "SEARCH" on website) to obtain additional part information including price, inventory and certifications: SMA Male to SMA Male Miter Right Angle Adapter, 27 GHz ET12748

8th Floor, Building 1, Yongfu Science and Technology Center Industrial Park,
Nanzha District 5, Humen,523900, Dongguan, Guangdong, China.

Webstie:www.ebeestock.com Email:sales@ebeestock.com

© 2022 Ebeestock Enterprises All Rights Reserved

SMA Male to SMA Male Miter Right Angle Adapter, 27 GHz

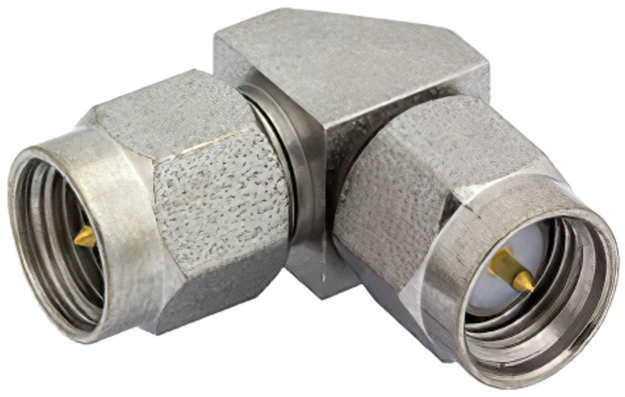

RF Adapters Technical Data Sheet ET12748

Description	Connector 1	Connector 2
Type	SMA Male	SMA Male
Polarity	Standard	Standard
Mating Cycles	500	500
Hex Size	5/16 in.	5/16 in.
Mating Torque	8 to 10 in-lbs [0.90 to 1.13 Nm]	8 to 10 in-lbs 0.90 to 1.13 Nm

Material Specifications

Description	Connector 1 Material	Connector 1 Plating	Connector 2 Material	Connector 2 Plating
Type	SMA Male		SMA Male	
Contact	Beryllium Copper	Gold over Nickel MIL-G-45204	Beryllium Copper	Gold over Nickel MIL-G-45204
Insulation	PTFE		PTFE	
Body	Passivated Stainless Steel	ASTM A380	Passivated Stainless Steel	ASTM A380
Coupling Nut	Passivated Stainless Steel	ASTM A380	Passivated Stainless Steel	ASTM A380

Environmental Specifications

Temperature

Operating Range	-55 to +100 ºC
Vibration	MIL-STD-202, Method 204, Cond. D (20G's)
Salt Spray	MIL-STD-202, Method 101, Cond. B, 5% salt solution

Compliance Certifications (see product page for current document)

Plotted and Other Data

Notes:

Click the following link (or enter part number in "SEARCH" on website) to obtain additional part information including price, inventory and certifications: SMA Male to SMA Male Miter Right Angle Adapter, 27 GHz ET12748

8th Floor, Building 1, Yongfu Science and Technology Center Industrial Park,
Nanzha District 5, Humen,523900, Dongguan, Guangdong, China.

Webstie:www.ebeestock.com Email:sales@ebeestock.com

© 2022 Ebeestock Enterprises All Rights Reserved

SMA Male to SMA Male Miter Right Angle Adapter, 27 GHz

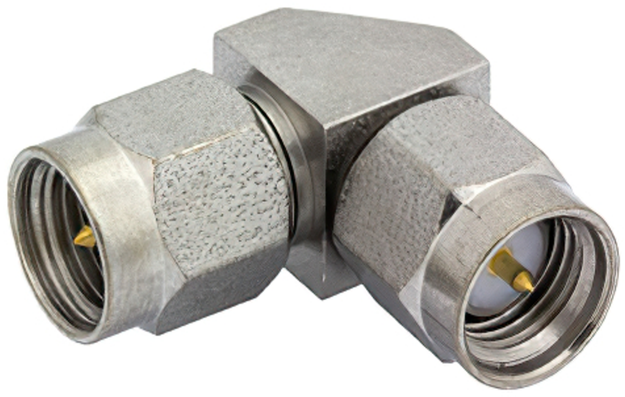

RF Adapters Technical Data Sheet ET12748

SMA Male to SMA Male Miter Right Angle Adapter, 27 GHz from Ebeestock Enterprises has same day shipment for domestic and International orders. Our RF, microwave and millimeter wave products maintain a 99.4% availability and are part of the broadest selection in the industry.

Click the following link (or enter part number in “SEARCH” on website) to obtain additional part information including price, inventory and certifications: SMA Male to SMA Male Miter Right Angle Adapter, 27 GHz

URL: https://www.ebeestock.com/sma-male-to-sma-male-miter-right-angle-adapter-27-ghz-0012748

The information contained in this document is accurate to the best of our knowledge and representative of the part described herein. It may be necessary to make modifications to the part and/or the documentation of the part, in order to implement improvements. Ebeestock reserves the right to make such changes as required. Unless otherwise stated, all specifications are nominal. Ebeestock does not make any representation or warranty regarding the suitability of the part described herein for any particular purpose, and Ebeestock does not assume any liability arising out of the use of any part or documentation.

8th Floor, Building 1, Yongfu Science and Technology Center Industrial Park,
Nanzha District 5, Humen,523900, Dongguan, Guangdong, China.

Webstie:www.ebeestock.com Email:sales@ebeestock.com

© 2022 Ebeestock Enterprises All Rights Reserved

© 2022 Ebeestock Enterprises All Rights Reserved

www.ebeestock.com

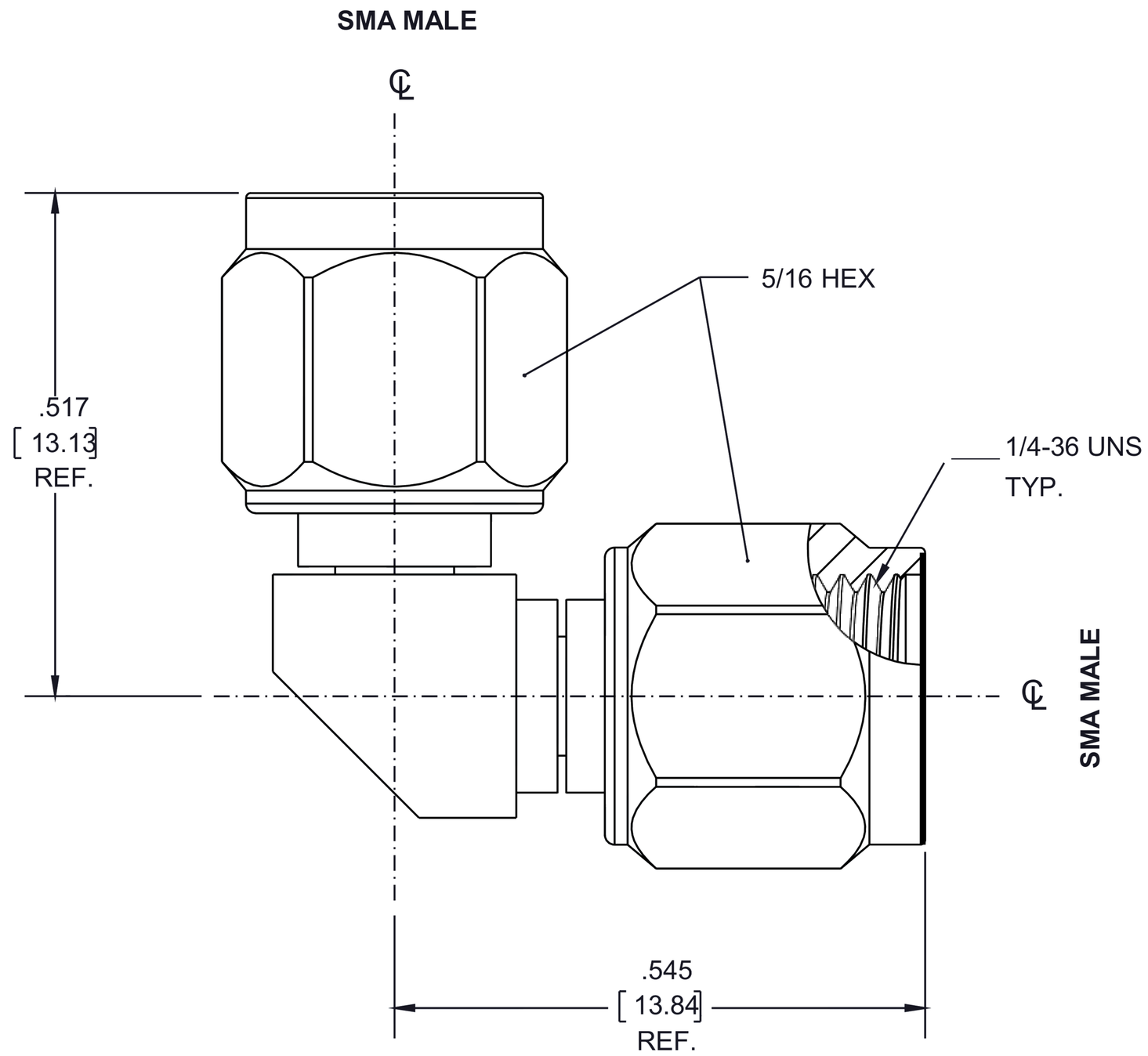

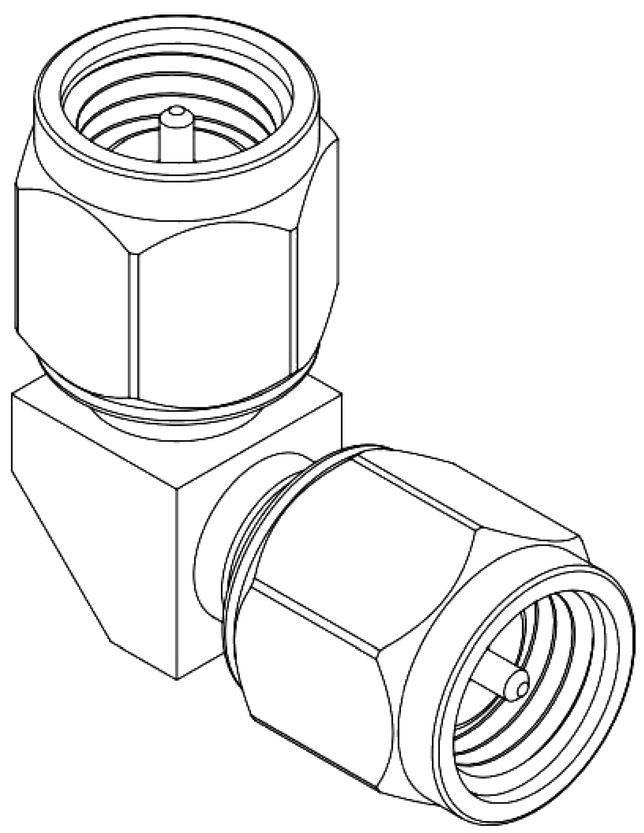

STANDARD TOLERANCES	
.X	±0.2
.XX	±0.01
.XXX	±0.005

*STANDARD TOLERANCES APPLY ONLY TO DIMENSIONS IN INCHES

ebeestock
Ebeestock.com
8th Floor, Building 1, Yongfu Science
and Technology Center Industrial Park,
Nanzha District 5, Humen,523900, Dongguan, Guangdong, China.
Webstie: www.ebeestock.com **Email:** sales@ebeestock.com

DWG TITLE

ET12748

NOTES:
1. UNLESS OTHERWISE SPECIFIED ALL DIMENSIONS ARE NOMINAL.
2. ALL SPECIFICATIONS ARE SUBJECT TO CHANGE WITHOUT NOTICE AT ANY TIME.
3. DIMENSIONS ARE IN INCHES [mm].

CAGE CODE 53919	CAD FILE 05/16/18	SCALE N/A	SIZE A	7361

© 2022 Ebeestock Enterprises All Rights Reserved