Precision QD SMA Male to SMA Female Adapter

RF Adapters Technical Data Sheet

ET12763

Configuration

- QD SMA Male Connector 1
- SMA Female Connector 2
- 50 Ohms
- Precision Design
- Straight Body Geometry

Features

- Max VSWR of 1.14:1 up to 18 GHz
- 50 µin minimum contact plating
- Gold over Nickel Plated Beryllium Copper Contact

Applications

- General Purpose Test
- Precision Test & Measurement

Description

Ebeestock's ET12763 precision QD SMA male to SMA female adapter is part of our full line of RF components available for same-day shipping. The SMA connector mates mechanically with commercially available 3.5mm and 2.92mm (K) connectors. The SMA connector mates mechanically with commercially available 3.5mm and 2.92mm (K) connectors. Our SMA to SMA adapter has a male to female gender configuration in a precision design. ET12763 SMA male to SMA female adapter operates to 18 GHz. The Ebeestock RF adapter provides excellent VSWR of 1.14:1 maximum.

RF adapters are often used to enable connections between two connector types that would otherwise not mate. Certain adapter configurations can also be used to protect connectors on expensive equipment where the number of connect/disconnect cycles is high. An RF, microwave or millimeter wave adapter is connected to the equipment, and the commonly changed connection is made with the adapter which can be easily replaced when it wears out after high usage; such adapters are referred to as connector savers. Ebeestock also offers bulkhead, panel mount, hermetically sealed, reverse polarity, and isolated ground adapter varieties to serve all of your RF, microwave and millimeter wave needs.

Electrical Specifications

Frequency Range	DC	18	GHz
VSWR		1.14:1	
Insertion Loss		0.26	dB
Operating Voltage (AC)		500	Vrms
Dielectric Withstanding Voltage (AC)		1,500	Vrms
High Potential Voltage (at 4 and 7 MHz)		1,000	Vrms
Corona Discharge (at 70,000 ft)		375	Vrms
Inner Conductor DC Resistance		4	mOhms
Outer Conductor DC Resistance		2	mOhms

Click the following link (or enter part number in "SEARCH" on website) to obtain additional part information including price, inventory and certifications: Precision QD SMA Male to SMA Female Adapter ET12763

8th Floor, Building 1, Yongfu Science and Technology Center Industrial Park,
Nanzha District 5, Humen,523900, Dongguan, Guangdong, China.

Webstie:www.ebeestock.com Email:sales@ebeestock.com

© 2022 Ebeestock Enterprises All Rights Reserved

Precision QD SMA Male to SMA Female Adapter

RF Adapters Technical Data Sheet ET12763

Insulation Resistance	5,000	MOhms

Electrical Specification Notes:
Values at 25°C, sea level.
VSWR = 1.05 + 0.005 x (fGHz).
Insertion Loss = 0.06 x sqrt(fGHz) dB.
RF Leakage -90 dB max at 2.5 GHz.

Mechanical Specifications

Size

Length	1.08 in [27.43 mm]
Width	0.505 in [12.83 mm]
Weight	0.006 lbs [2.72 g]

Description	Connector 1	Connector 2
Type	SMA Male	SMA Female
Polarity	Standard	Standard
Mating Cycles	1,000	1,000
Mating Torque	8 to 10 in-lbs [0.90 to 1.13 Nm]	

Material Specifications

	Connector 1		Connector 2	
Description	Material	Plating	Material	Plating
Type	QD SMA Male		SMA Female	
Contact	Beryllium Copper	Gold over Nickel 50 µin minimum	Beryllium Copper	Gold over Nickel 50 µin minimum
Insulation	PTFE		PTFE	
Outer Conductor	Beryllium Copper	Gold over Nickel 10 µin minimum	Brass	Gold 10 µin minimum
Coupling Nut	Beryllium Copper	Nickel 50 µin minimum		

Environmental Specifications

Temperature

Operating Range	-65 to +165 deg C
Humidity	MIL-STD-202, Method 106
Shock	MIL-STD-202, Method 213, Test Cond. I
Vibration	MIL-STD-202, Method 204, Test Cond. D

Click the following link (or enter part number in “SEARCH” on website) to obtain additional part information including price, inventory and certifications: Precision QD SMA Male to SMA Female Adapter ET12763

8th Floor, Building 1, Yongfu Science and Technology Center Industrial Park,
Nanzha District 5, Humen,523900, Dongguan, Guangdong, China.

Webstie:www.ebeestock.com Email:sales@ebeestock.com

© 2022 Ebeestock Enterprises All Rights Reserved

Precision QD SMA Male to SMA Female Adapter

RF Adapters Technical Data Sheet ET12763

Thermal Shock	MIL-STD-202, Method 107, Test Cond. B
Salt Spray	MIL-STD-202, Method 101, Test Cond. B

Compliance Certifications (see product page for current document)

Plotted and Other Data

Notes:

Precision QD SMA Male to SMA Female Adapter from Ebeestock Enterprises has same day shipment for domestic and International orders. Our RF, microwave and millimeter wave products maintain a 99% availability and are part of the broadest selection in the industry.

Click the following link (or enter part number in “SEARCH” on website) to obtain additional part information including price, inventory and certifications: Precision QD SMA Male to SMA Female Adapter ET12763

URL: https://www.ebeestock.com/precision-qd-sma-male-to-sma-female-adapter-0012763

The information contained in this document is accurate to the best of our knowledge and representative of the part described herein. It may be necessary to make modifications to the part and/or the documentation of the part, in order to implement improvements. Ebeestock reserves the right to make such changes as required. Unless otherwise stated, all specifications are nominal. Ebeestock does not make any representation or warranty regarding the suitability of the part described herein for any particular purpose, and Ebeestock does not assume any liability arising out of the use of any part or documentation.

8th Floor, Building 1, Yongfu Science and Technology Center Industrial Park,
Nanzha District 5, Humen,523900, Dongguan, Guangdong, China.

Webstie:www.ebeestock.com Email:sales@ebeestock.com

© 2022 Ebeestock Enterprises All Rights Reserved

ET12763 CAD Drawing

Precision QD SMA Male to SMA Female Adapter

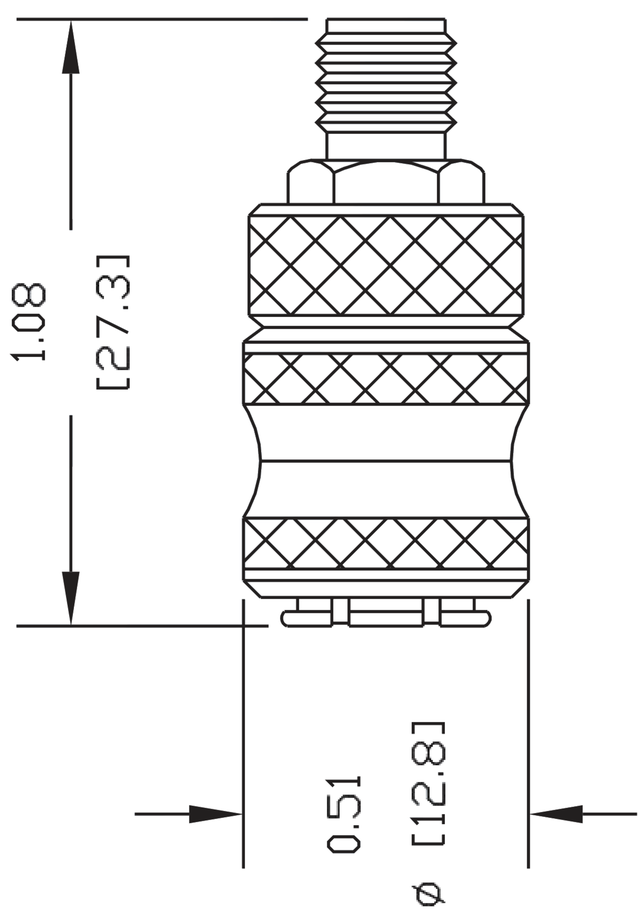

NOTES:
1. UNLESS OTHERWISE SPECIFIED ALL DIMENSIONS ARE NOMINAL.
2. ALL SPECIFICATIONS ARE SUBJECT TO CHANGE WITHOUT NOTICE AT ANY TIME.
3. DIMENSIONS ARE IN INCHES [mm].

DWG TITLE
ET12763

REV. -

FSCM NO. 53919

CAD FILE 091206

SCALE N/A

SIZE A

127

ebeestock
Ebeestock.com
8th Floor, Building 1, Yongfu Science
and Technology Center Industrial Park,
Nanzha District 5, Humen,523900, Dongguan, Guangdong, China.
Webstie: www.ebeestock.com Email: sales@ebeestock.com

© 2022 Ebeestock Enterprises All Rights Reserved