Low PIM TNC Male to TNC Male Adapter

TECHNICAL DATA SHEET ET12816

Configuration

Connector 1	TNC Male
Impedance 1	50 Ohms
Connector 2	TNC Male
Impedance 2	50 Ohms
Adapter Design	Low PIM
Body Style	Straight

Electrical Specifications

Frequency Range, GHz	DC to 6
Maximum VSWR	1.25:1
Maximum Passive Intermodulation (2 x 20 Watts), dBc	-150

Mechanical Specifications

Temperature

Operating Range,deg C	-45 to +125

Size

Length, in [mm]	1.3 [33.02]
Width/Dia., in [mm]	0.6 [15.24]

Connector 1

Type	TNC Male
Inner Conductor Material and Plating	Beryllium Copper, Silver
Coupling Nut Material and Plating	Brass, Tri-Metal
Hex Size, mm	14
Torque, in-lbs [Nm]	6 [0.68]
Body Material and Plating	Brass, Tri-Metal
Dielectric Type	PTFE

Connector 2

Type	TNC Male
Inner Conductor Material and Plating	Beryllium Copper, Silver
Coupling Nut Material and Plating	Brass, Tri-Metal
Hex Size, mm	14
Torque, in-lbs [Nm]	6 [0.68]
Body Material and Plating	Brass, Tri-Metal
Dielectric Type	PTFE

Compliance Certifications (visit for current document) RoHS Compliant Yes

Click the following link (or enter part number in “SEARCH” on website) to obtain additional part information including price, inventory and certifications: Low PIM TNC Male to TNC Male Adapter ET12816

8th Floor, Building 1, Yongfu Science and Technology Center Industrial Park,
Nanzha District 5, Humen,523900, Dongguan, Guangdong, China.

Webstie:www.ebeestock.com Email:sales@ebeestock.com

© 2022 Ebeestock Enterprises All Rights Reserved

Low PIM TNC Male to TNC Male Adapter

TECHNICAL DATA SHEET ET12816

Plotted and Other Data

Notes:

- Values at +25 °C, sea level

Low PIM TNC Male to TNC Male Adapter from Ebeestock Enterprises has same day shipment for domestic and International orders. Our RF, microwave and millimeter wave products maintain a 99% availability and are part of the broadest selection in the industry.

Click the following link (or enter part number in “SEARCH” on website) to obtain additional part information including price, inventory and certifications: Low PIM TNC Male to TNC Male Adapter ET12816

URL: https://www.ebeestock.com/low-pim-tnc-male-to-tnc-male-adapter-0012816

The information contained in this document is accurate to the best of our knowledge and representative of the part described herein. It may be necessary to make modifications to the part and/or the documentation of the part, in order to implement improvements. Ebeestock reserves the right to make such changes as required. Unless otherwise stated, all specifications are nominal. Ebeestock does not make any representation or warranty regarding the suitability of the part described herein for any particular purpose, and Ebeestock does not assume any liability arising out of the use of any part or documentation.

8th Floor, Building 1, Yongfu Science and Technology Center Industrial Park,
Nanzha District 5, Humen,523900, Dongguan, Guangdong, China.

Webstie:www.ebeestock.com Email:sales@ebeestock.com

© 2022 Ebeestock Enterprises All Rights Reserved

ET12816 CAD Drawing

Low PIM TNC Male to TNC Male Adapter

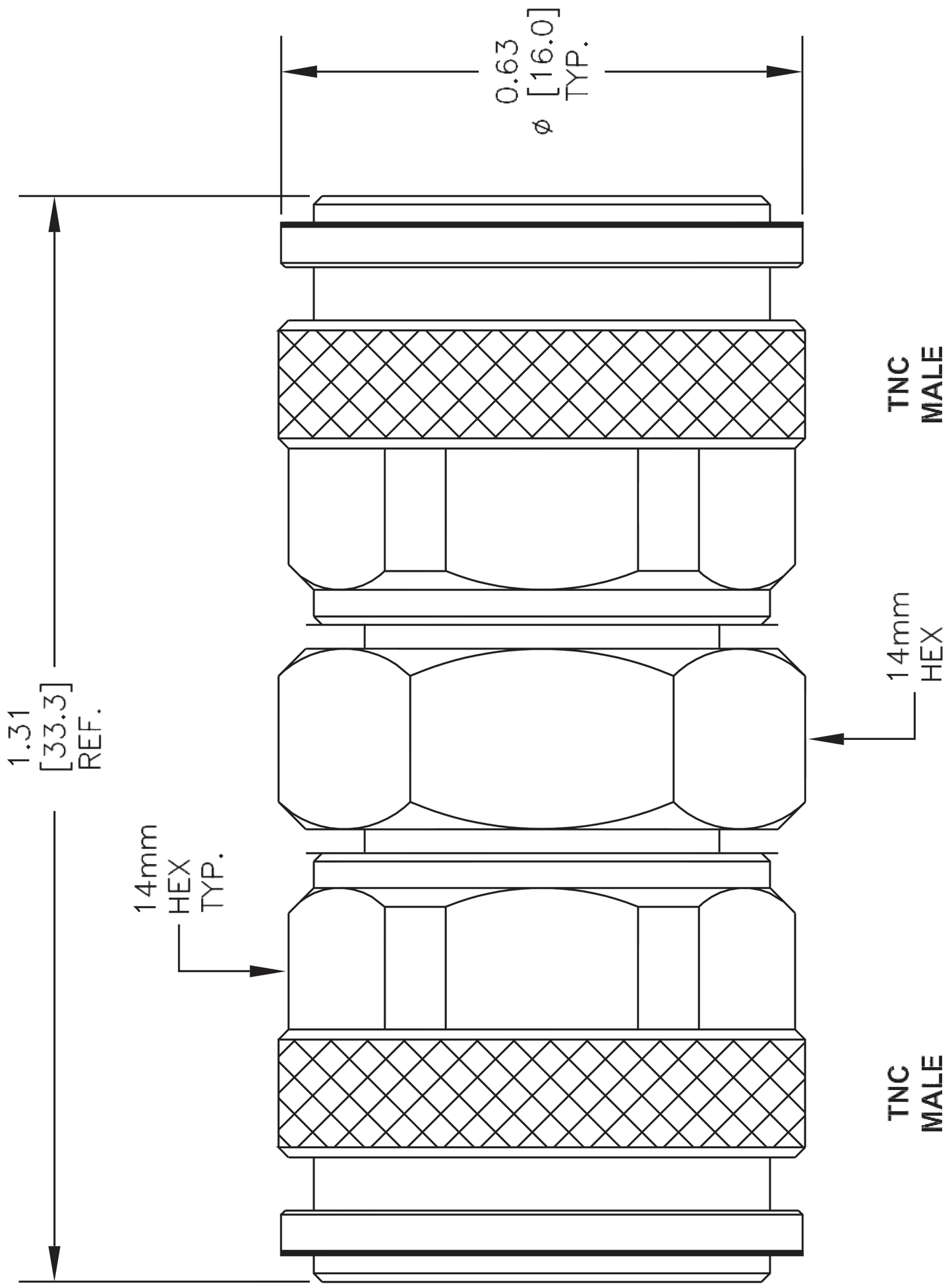

NOTES:
1. UNLESS OTHERWISE SPECIFIED ALL DIMENSIONS ARE NOMINAL.
2. ALL SPECIFICATIONS ARE SUBJECT TO CHANGE WITHOUT NOTICE AT ANY TIME.
3. DIMENSIONS ARE IN INCHES [mm].

DWG TITLE
ET12816

FSCM NO. 53919

CAD FILE 032814

SCALE N/A

SIZE A

2233

ebeestock
Ebeestock.com
8th Floor, Building 1, Yongfu Science
and Technology Center Industrial Park,
Nanzha District 5, Humen,523900, Dongguan, Guangdong, China.
Webstie: www.ebeestock.com Email: sales@ebeestock.com

© 2022 Ebeestock Enterprises All Rights Reserved