1 dBi Embedded PCB Antenna 2,400-2,500 MHz UMCX Connector

Antennas Technical Data Sheet ET12967

Features

- Highly efficient printed circuit board (PCB) design
- Designed for omni-directional applications
- Low profile, compact size
- IPEX, U.FL, UMCX compatible connector

Applications

- Integrate into self contained wireless equipment
- Embedded applications requiring integration flexibility
- 2.4 GHz WLAN and Bluetooth

Description

The ET12967 is an omnidirectional antenna designed to integrate into devices requiring wireless capability. By embedding these antennas directly into a device, the need for external antennas is eliminated. The omni-directional radiation pattern makes it ideal for multipoint and mobile wireless systems.

Configuration

Design	PCB
Band Type	Single
Radiation Pattern	Omni Directional
Cable Type	1.13mm
Cable Length	3.937 in [100 mm]
Connector Type	UMCX Plug
Number of Ports	1

Electrical Specifications

Description	Minimum	Typical	Maximum	Units
Frequency Range	2,400		2,500	GHz
Input VSWR			2:1	
Impedance		50		Ohms
Gain		1		dBi

Mechanical Specifications

Size

Overall Length	1.37795 in [35 mm]
Width	0.314961 in [8 mm]

Environmental Specifications

Temperature

Operating Range	-30 to +65 deg C

Compliance Certifications (see product page for current document)

Plotted and Other Data

Notes:

Click the following link (or enter part number in “SEARCH” on website) to obtain additional part information including price, inventory and certifications: 1 dBi Embedded PCB Antenna 2,400-2,500 MHz UMCX Connector ET12967

8th Floor, Building 1, Yongfu Science and Technology Center Industrial Park,
Nanzha District 5, Humen,523900, Dongguan, Guangdong, China.

Webstie:www.ebeestock.com Email:sales@ebeestock.com

© 2022 Ebeestock Enterprises All Rights Reserved

1 dBi Embedded PCB Antenna 2,400-2,500 MHz UMCX Connector

Antennas Technical Data Sheet ET12967

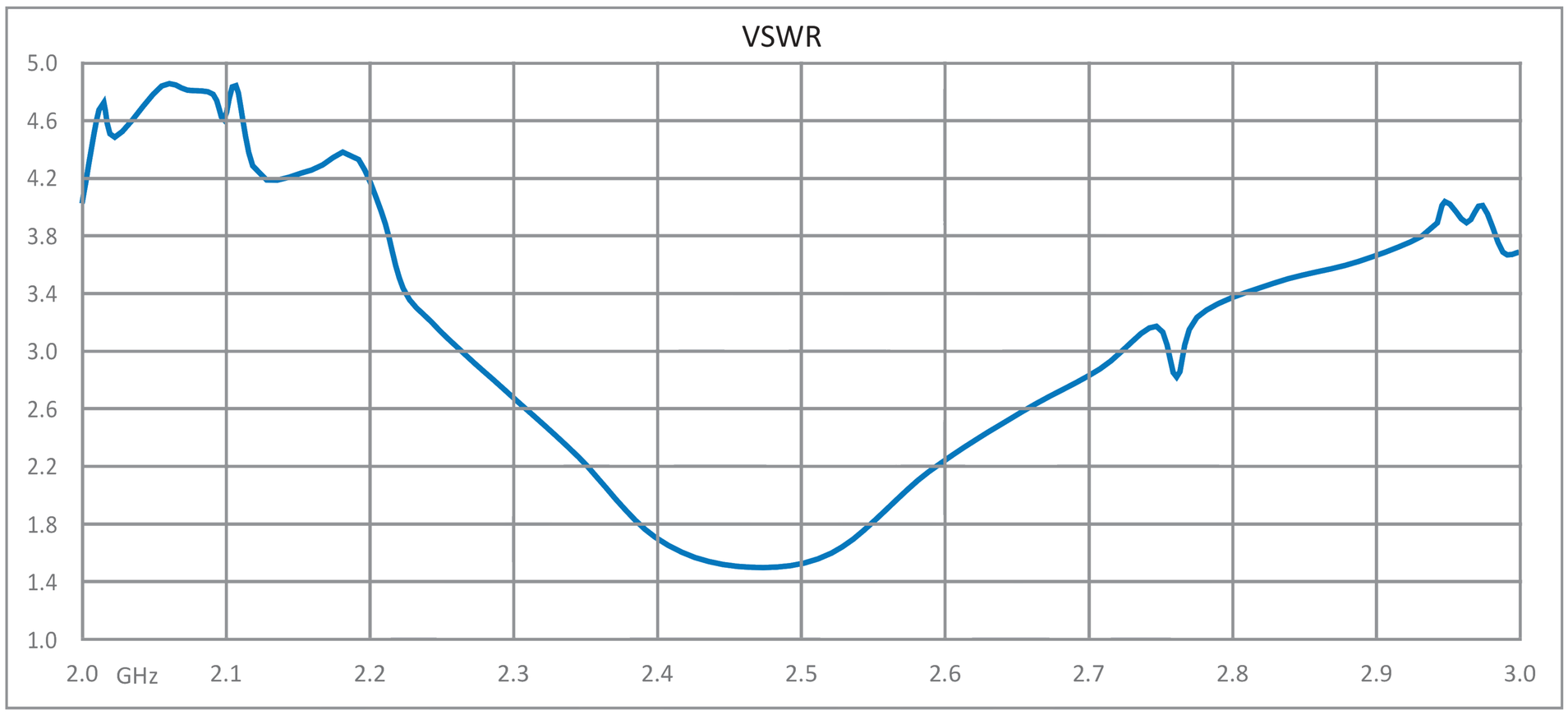

1 dBi Embedded PCB Antenna 2,400-2,500 MHz UMCX Connector from Ebeestock Enterprises has same day shipment for domestic and International orders. Our RF, microwave and millimeter wave products maintain a 99.4% availability and are part of the broadest selection in the industry.

Click the following link (or enter part number in “SEARCH” on website) to obtain additional part information including price, inventory and certifications: 1 dBi Embedded PCB Antenna 2,400-2,500 MHz UMCX Connector ET12967

URL: https://www.ebeestock.com/1-dbi-embedded-pcb-antenna-2-400-2-500-mhz-umcx-connector-0012967

The information contained in this document is accurate to the best of our knowledge and representative of the part described herein. It may be necessary to make modifications to the part and/or the documentation of the part, in order to implement improvements. Ebeestock reserves the right to make such changes as required. Unless otherwise stated, all specifications are nominal. Ebeestock does not make any representation or warranty regarding the suitability of the part described herein for any particular purpose, and Ebeestock does not assume any liability arising out of the use of any part or documentation.

8th Floor, Building 1, Yongfu Science and Technology Center Industrial Park,
Nanzha District 5, Humen,523900, Dongguan, Guangdong, China.

Webstie:www.ebeestock.com Email:sales@ebeestock.com

© 2022 Ebeestock Enterprises All Rights Reserved

© 2022 Ebeestock Enterprises All Rights Reserved

www.ebeestock.com

REVISIONS			
REV.	DESCRIPTION	DATE	APPROVED
A	INITIAL RELEASE	06/18/2020	KHIETPAS

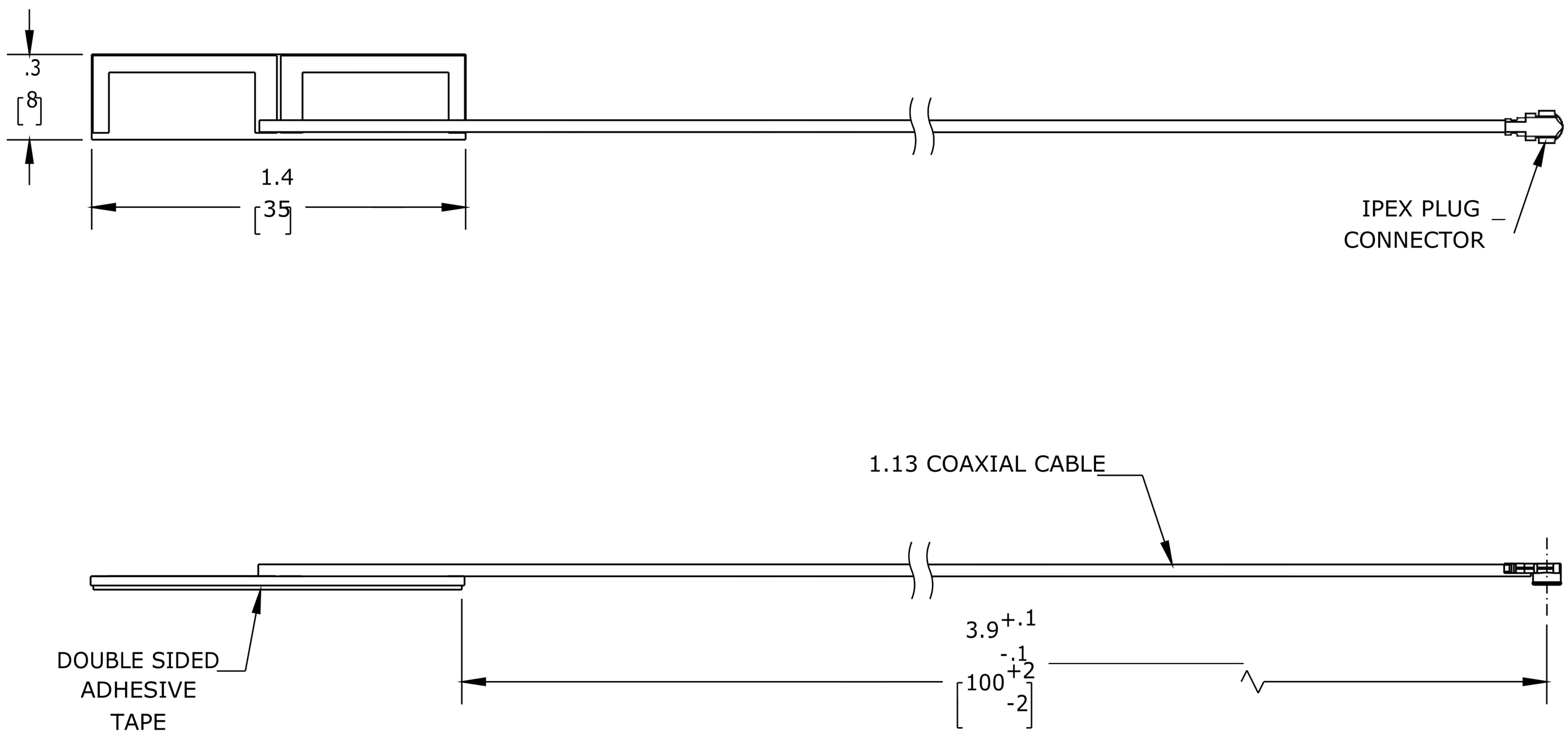

UNLESS OTHERWISE SPECIFIED
LEADING DIMENSIONS ARE INCHES
DIMENSIONS IN [ ] ARE MILLIMETERS

TOLERANCES:

.X = ±.2 [5.08]	FRACTIONS
.XX = ± .02 [.51]	± 1/32
.XXX = ±.005 [.13]	ANGLES ± 1°

CABLE LENGTH (L) TOLERANCES:

L ≤ 12 [305] = +1 [25] / -0
12 [305] < L ≤ 60 [1524] = +2 [51] / -0
60 [1524] < L ≤ 120 [3048] = +4 [102] / -0
120 [3048] < L ≤ 300 [7620] = +6 [152] / -0
300 [7620] < L = +5%L / -0

ALL DIMENSIONS SHOWN
ARE FOR REFERENCE ONLY.

ebeestock
Ebeestock.com
8th Floor, Building 1, Yongfu Science
and Technology Center Industrial Park,
Nanzha District 5, Humen,523900, Dongguan, Guangdong, China.
Webstie: www.ebeestock.com **Email:** sales@ebeestock.com

THIRD-ANGLE PROJECTION

THE INFORMATION AND
DESIGN IN THIS DOCUMENT
IS THE PROPERTY OF
Ebeestock CORPORATION
ALL RIGHTS RESERVED.

SHEET 1 OF 1

SCALE N/A

SIZE	CAGE CODE	DRAWN BY	ITEM NO.	REV
A	53919	SLI	ET12967	A

THESE COMMODITIES, TECHNOLOGY OR SOFTWARE WERE EXPORTED FROM THE UNITED STATES IN ACCORDANCE
WITH THE EXPORT ADMINISTRATION REGULATIONS. DIVERSION CONTRARY TO U.S. LAW PROHIBITED.