Paddle Portable Dual Band Band Antenna Operates From With a Maximum 6 dBi Gain RP SMA Male Input Connector

Antennas Technical Data Sheet ET13046

Configuration

Design	Portable
Band Type	Dual
Radiation Pattern	Omni Directional
Connector Type	SMA Male Reverse Polarity
Number of Ports	1

Electrical Specifications

Description	Minimum	Typical	Maximum	Units
Input VSWR			2:1	
Impedance		50		Ohms
Gain			6	dBi

Specifications by Band

Description	Band 1	Band 2	Band 3	Band 4	Band 5	Units
Range	2.4 to 2.5	5 to 5.9				GHz
Gain	3.5	6				dBi

Mechanical Specifications

Size

Overall Length	4.9 in [124.46 mm]
Width	0.9 in [22.86 mm]
Height	0.5 in [12.7 mm]
Weight	0.046 lbs [20.87 g]

Environmental Specifications

Temperature

Operating Range	-10 to +55 deg C

Compliance Certifications (see product page for current document)

Plotted and Other Data

Notes:

Click the following link (or enter part number in “SEARCH” on website) to obtain additional part information including price, inventory and certifications: Paddle Portable Dual Band Band Antenna Operates From With a Maximum 6 dBi Gain RP SMA Male Input Connector ET13046

8th Floor, Building 1, Yongfu Science and Technology Center Industrial Park,
Nanzha District 5, Humen,523900, Dongguan, Guangdong, China.

Webstie:www.ebeestock.com Email:sales@ebeestock.com

© 2022 Ebeestock Enterprises All Rights Reserved

Paddle Portable Dual Band Band Antenna Operates From With a Maximum 6 dBi Gain RP SMA Male Input Connector

Antennas Technical Data Sheet ET13046

Paddle Portable Dual Band Band Antenna Operates From With a Maximum 6 dBi Gain RP SMA Male Input Connector from Ebeestock Enterprises has same day shipment for domestic and International orders. Our RF, microwave and millimeter wave products maintain a 99.4% availability and are part of the broadest selection in the industry.

Click the following link (or enter part number in “SEARCH” on website) to obtain additional part information including price, inventory and certifications: Paddle Portable Dual Band Band Antenna Operates From With a Maximum 6 dBi Gain RP SMA Male Input Connector ET13046

URL: https://www.ebeestock.com/paddle-portable-dual-band-band-antenna-operates-from-with-a-maximum-6-dbi-gain-rp-sma-male-input-connector-0013046

The information contained in this document is accurate to the best of our knowledge and representative of the part described herein. It may be necessary to make modifications to the part and/or the documentation of the part, in order to implement improvements. Ebeestock reserves the right to make such changes as required. Unless otherwise stated, all specifications are nominal. Ebeestock does not make any representation or warranty regarding the suitability of the part described herein for any particular purpose, and Ebeestock does not assume any liability arising out of the use of any part or documentation.

8th Floor, Building 1, Yongfu Science and Technology Center Industrial Park,
Nanzha District 5, Humen,523900, Dongguan, Guangdong, China.

Webstie:www.ebeestock.com Email:sales@ebeestock.com

© 2022 Ebeestock Enterprises All Rights Reserved

© 2022 Ebeestock Enterprises All Rights Reserved

PE51143 REV 1.1

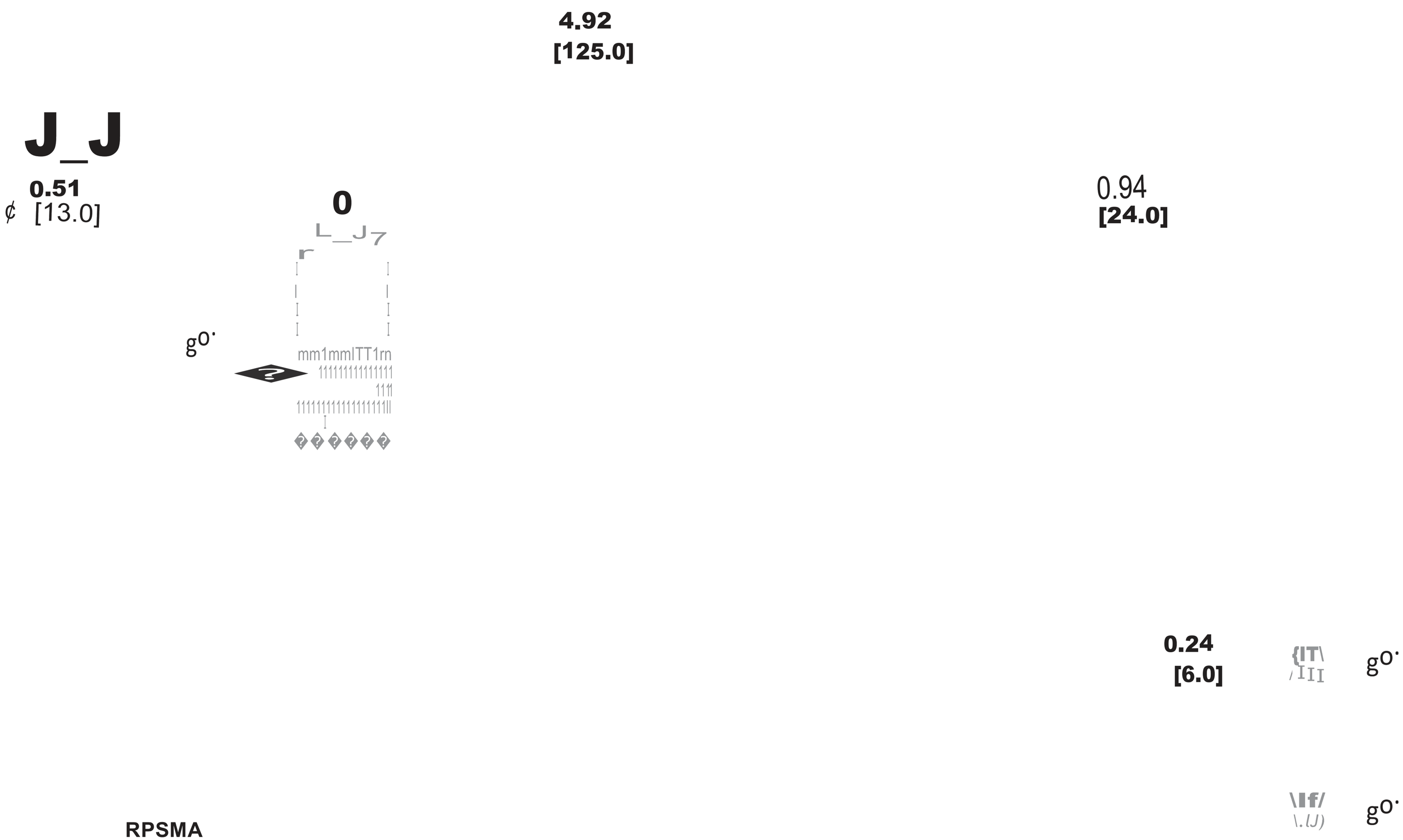

/PE/ K

8th Floor, Building 1, Yongfu Science and Technology Center Industrial Park
P.O. Box 16759 j Irvine CA j 92623

Phone: (949) 261-1920 j Fax: (949) 261-7451
Website:

www.ebeestock.com j E-Mail: sales@Ebeestock.com

DWG TITLE
ET13046

NOTES:
1. UNLESS OTHERWISE SPECIFIED ALL DIMENSIONS ARE NOMINAL.
2. ALL SPECIFICATIONS ARE SUBJECT TO CHANGE WITHOUT NOTICE AT ANY TIME.
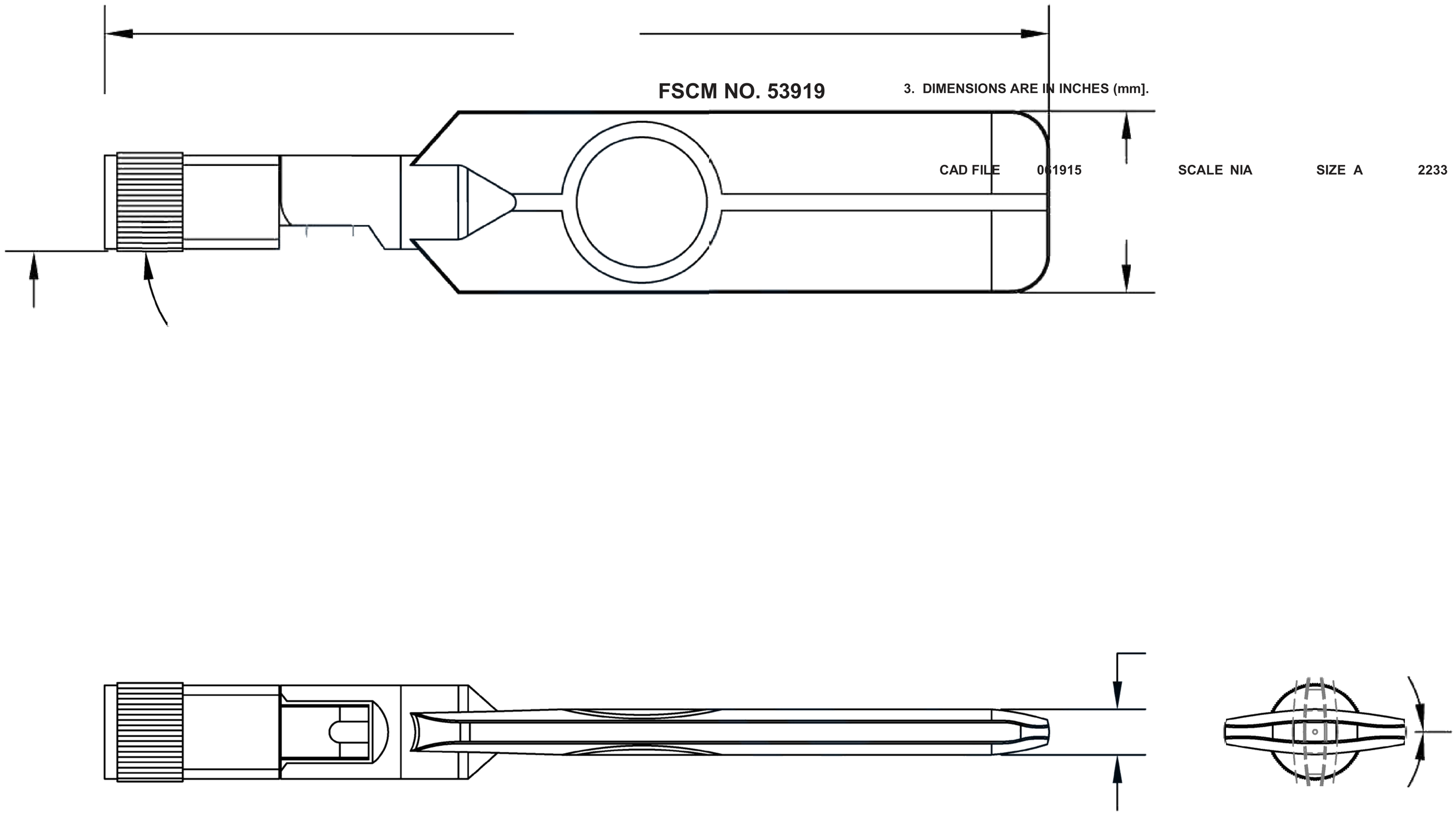
© 2022 Ebeestock Enterprises All Rights Reserved