Whip Antenna Operates From 880 MHz to 960 MHz With a Typical 0 dBi Gain SMA Female Input Connector IP67 Rated

TECHNICAL DATA SHEET ET13057

Ebeestock's ¼ wave portable omni whip antennas feature a textured black finish and a strain-relief base to ensure durability and repeatable RF performance. Our ¼ wave portable omni whip antennas are availabile with operating frequencies as low as 400 MHz and as high as 960 MHz. These antennas are offered with gain ranges from unity to 2 dBi. The omni-directional radiation pattern and IP67 rating make these antennas ideal for mobile radio communications.

- Operating frequencies from 400 MHz to 960 MHz
- Gain ranges from unity to 2 dBi
- VSWR less than 2:1, in most cases
- 50 Ohm Impedance
- IP67 Rated
- Variety of connector types available (SMA Female, MX, or MD) for use in many portable handheld radio applications. See below for common brand & connector combinations.
- MX (1/4-32 x 7/32) – Commonly used in: Motorola, Radius, Saber, Saber+, Spirit, Expo, Kenwood, Maxon, Midland, Wilson, GE Monogram, and Vertex Standard.
- MD (M7 x 1.0) – Commonly used in: GE
- SMA Female (SF) – Commonly used in: Motorola, Visar, and Kenwood

Configuration

Design	Whip Portable
Frequency Range	880 to 960 MHz
Polarization	Vertical
Interface 1	SMA Female
Number of Output Ports	1

Electrical Specifications (Values at 25°C, sea level)

Description	Minimum	Typical	Maximum	Units
Impedance		50		Ohms
Typical Gain	0			dBi
Input VSWR			2:1	

Mechanical Specifications

Radome Material	TPE
Size	
Length	2.89 in [73.41 mm]
Width	0.58 in [14.73 mm]
Weight	0.024 lbs [10.89 g]

Environmental Specifications

Temperature	
Operating Range	-20 to +65 deg C
Environment	IP67

Click the following link (or enter part number in "SEARCH" on website) to obtain additional part information including price, inventory and certifications: Whip Antenna Operates From 880 MHz to 960 MHz With a Typical 0 dBi Gain SMA Female Input Connector IP67 Rated ET13057

8th Floor, Building 1, Yongfu Science and Technology Center Industrial Park,
Nanzha District 5, Humen,523900, Dongguan, Guangdong, China.

Webstie:www.ebeestock.com Email:sales@ebeestock.com

© 2022 Ebeestock Enterprises All Rights Reserved

Whip Antenna Operates From 880 MHz to 960 MHz With a Typical 0 dBi Gain SMA Female Input Connector IP67 Rated

TECHNICAL DATA SHEET ET13057

Compliance Certifications (visit for current document) RoHS Compliant

Plotted and Other Data

Notes:

- Values at 25 °C, sea level

Outline Drawing

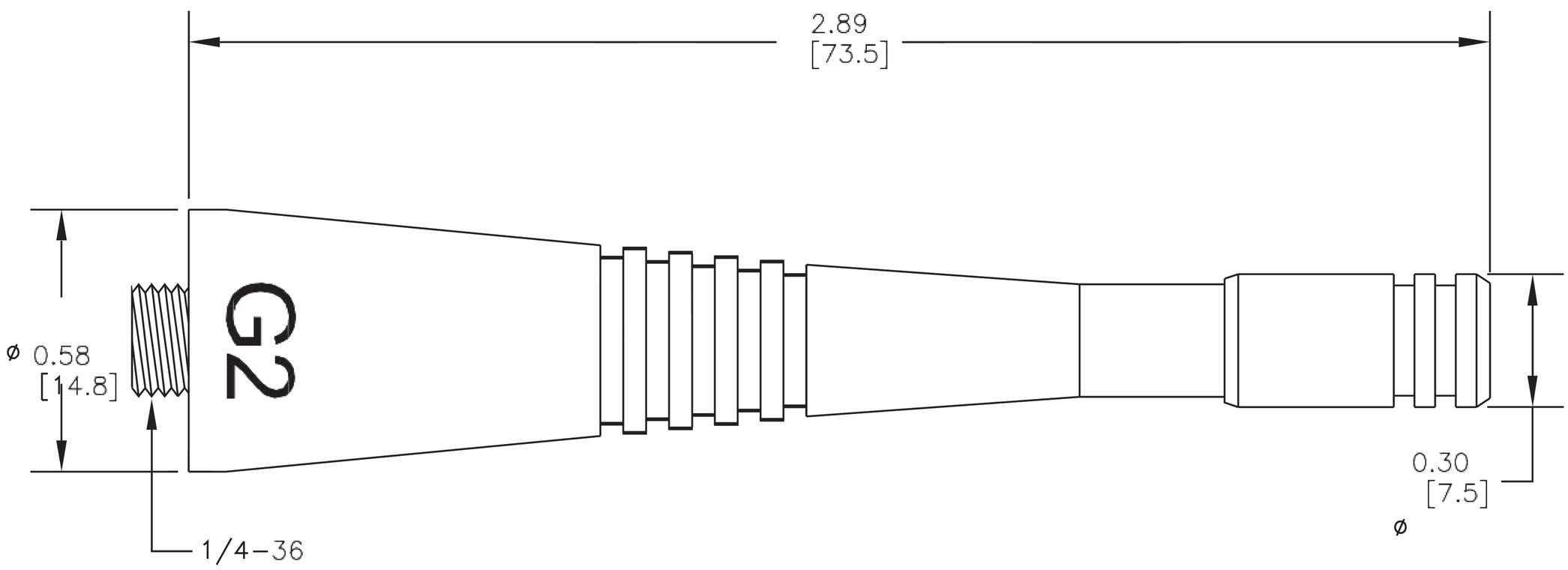

Click the following link (or enter part number in “SEARCH” on website) to obtain additional part information including price, inventory and certifications: Whip Antenna Operates From 880 MHz to 960 MHz With a Typical 0 dBi Gain SMA Female Input Connector IP67 Rated ET13057

8th Floor, Building 1, Yongfu Science and Technology Center Industrial Park,
Nanzha District 5, Humen,523900, Dongguan, Guangdong, China.

Webstie:www.ebeestock.com Email:sales@ebeestock.com

© 2022 Ebeestock Enterprises All Rights Reserved

Whip Antenna Operates From 880 MHz to 960 MHz With a Typical 0 dBi Gain SMA Female Input Connector IP67 Rated

TECHNICAL DATA SHEET ET13057

Whip Antenna Operates From 880 MHz to 960 MHz With a Typical 0 dBi Gain SMA Female Input Connector IP67 Rated from Ebeestock Enterprises has same day shipment for domestic and International orders. Our RF, microwave and millimeter wave products maintain a 99% availability and are part of the broadest selection in the industry.

Click the following link (or enter part number in “SEARCH” on website) to obtain additional part information including price, inventory and certifications: Whip Antenna Operates From 880 MHz to 960 MHz With a Typical 0 dBi Gain SMA Female Input Connector IP67 Rated ET13057

URL: https://www.ebeestock.com/whip-antenna-operates-from-880-mhz-to-960-mhz-with-a-typical-0-dbi-gain-sma-female-input-connector-ip67-rated-0013057

The information contained in this document is accurate to the best of our knowledge and representative of the part described herein. It may be necessary to make modifications to the part and/or the documentation of the part, in order to implement improvements. Ebeestock reserves the right to make such changes as required. Unless otherwise stated, all specifications are nominal. Ebeestock does not make any representation or warranty regarding the suitability of the part described herein for any particular purpose, and Ebeestock does not assume any liability arising out of the use of any part or documentation.

8th Floor, Building 1, Yongfu Science and Technology Center Industrial Park,
Nanzha District 5, Humen,523900, Dongguan, Guangdong, China.

Webstie:www.ebeestock.com Email:sales@ebeestock.com

© 2022 Ebeestock Enterprises All Rights Reserved