Blue FAKRA Plug to SMA Female Cable Using ET38358 Coax In 10 0 CM Length

RF Cable Assemblies Technical Data Sheet ET22268

Configuration

- Connector 1: FAKRA Plug
- Connector 2: SMA Female
- Cable Type: ET-C100-LSZH

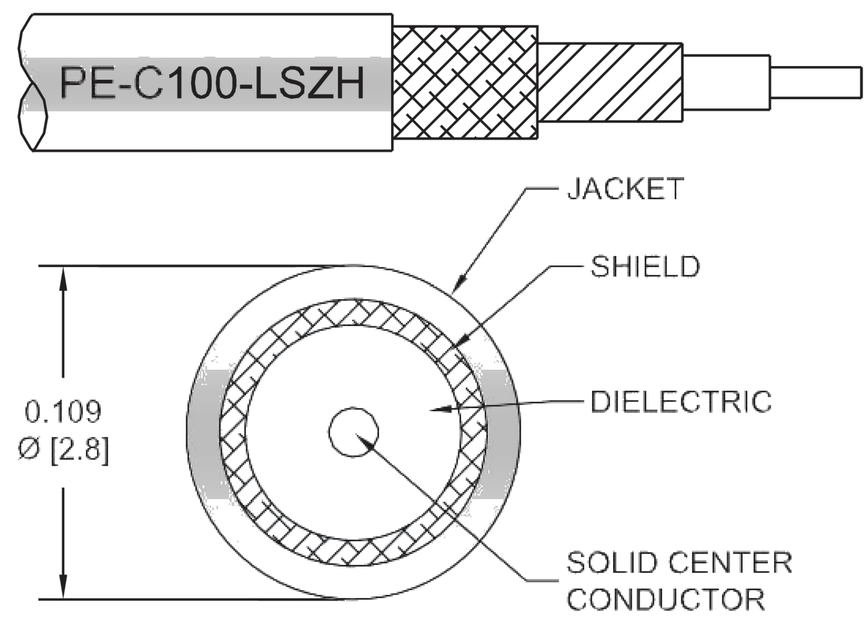

Features

- Max Frequency 4 GHz
- Shielding Effectivity > 90 dB
- 66% Phase Velocity
- Double Shielded
- LSZH Jacket

Applications

- General Purpose
- Laboratory Use

Description

Ebeestock's ET22268 blue FAKRA plug to SMA female 100 cm cable using ET-C100-LSZH coax is part of our full line of RF components available for same-day shipping. Ebeestock's flexible RF cable assemblies are ideal for applications where tight bends and flexure are required. This Ebeestock FAKRA to SMA cable assembly has a plug to female gender configuration with 50 ohm flexible ET-C100-LSZH coax. The ET22268 FAKRA plug to SMA female cable assembly operates to 4 GHz. The double shielding of this Ebeestock cable assembly provides excellent shielding effectiveness of bet- ter than 90 dB.

Custom versions of most RF cable assemblies can be built and shipped same day. Custom cable assembly lengths can be obtained by specifying the desired length on the web site at time of order or by contacting a sales representative. Other avail- able RF cable assembly value added services include connector orientation or clocking, heat shrink booting and custom label- ing. RF testing can also be performed to document the electrical performance of your cable assembly.

Click the following link (or enter part number in "SEARCH" on website) to obtain additional part information including price, inventory and certifications: Blue FAKRA Plug to SMA Female Cable Using ET-C100-LSZH Coax In 100 CM Length ET22268

8th Floor, Building 1, Yongfu Science and Technology Center Industrial Park,
Nanzha District 5, Humen,523900, Dongguan, Guangdong, China.

Webstie:www.ebeestock.com Email:sales@ebeestock.com

© 2022 Ebeestock Enterprises All Rights Reserved

Blue FAKRA Plug to SMA Female Cable Using ET38358 Coax In 10 0 CM Length

RF Cable Assemblies Technical Data Sheet ET22268

Electrical Specifications

Description	Minimum	Typical	Maximum	Units
Frequency Range	DC		4	GHz
VSWR			1.4:1	
Velocity of Propagation		66		%
RF Shielding	90			dB
Group Delay		1.62 [5.31]		ns/ft [ns/m]
Capacitance		30.8 [101.05]		pF/ft [pF/m]
Inductance		0.077 [0.25]		uH/ft [uH/m]
DC Resistance Inner Conductor		81 [265.75]		Ω/1000ft [Ω/Km]
DC Resistance Outer Conductor		9.5 [31.17]		Ω/1000ft [Ω/Km]
Jacket Spark			2,000	Vrms

Specifications by Frequency

Description	F1	F2	F3	F4	F5	Units
Frequency	0.1	0.25	0.5	1	4	GHz
Insertion Loss (Typ.)	0.3	0.48	0.69	0.99	2.12	dB

Electrical Specification Notes:
The Insertion Loss data above is based on the performance specifications of the coax and connectors used in this assembly. The Insertion Loss includes an estimated insertion loss of 0.1*SQRT(FGHz) dB per connector.

Mechanical Specifications

Cable Assembly

Length*	39.37 in [100 cm]
Weight	0.045 lbs [20.41 g]

Cable

Cable Type	ET-C100-LSZH
Impedance	50 Ohms
Inner Conductor Type	Solid
Inner Conductor Material and Plating	Copper Clad Steel
Dielectric Type	PE
Number of Shields	2
Shield Layer 1	Aluminum Tape
Shield Layer 2	Tinned Copper Braid
Jacket Material	LSZH, Black
Jacket Diameter	0.109 in [2.77 mm]

Click the following link (or enter part number in “SEARCH” on website) to obtain additional part information including price, inventory and certifications: Blue FAKRA Plug to SMA Female Cable Using ET-C100-LSZH Coax In 100 CM Length ET22268

8th Floor, Building 1, Yongfu Science and Technology Center Industrial Park,
Nanzha District 5, Humen,523900, Dongguan, Guangdong, China.

Webstie:www.ebeestock.com Email:sales@ebeestock.com

© 2022 Ebeestock Enterprises All Rights Reserved

Blue FAKRA Plug to SMA Female Cable Using ET38358 Coax In 10 0 CM Length

RF Cable Assemblies Technical Data Sheet ET22268

One Time Minimum Bend Radius	0.25 in [6.35 mm]
Repeated Minimum Bend Radius	1 in [25.4 mm]
Bending Moment	0.1 lbs-ft [0.14 N-m]
Flat Plate Crush	10 lbs/in [0.18 Kg/mm]
Tensile Strength	15 lbs [6.8 Kg]

Connectors

Description	Connector 1	Connector 2
Type	FAKRA Plug	SMA Female
Specification		MIL-STD-348
Impedance	50 Ohms	50 Ohms
Configuration	Straight	Straight
Mating Cycles		100
Contact Material and Plating	Phosphor Bronze, Gold	Beryllium Copper, Gold
Contact Plating Specification		ASTM-B488
Dielectric Type	PTFE	PTFE
Outer Conductor Material and Plating	Brass, Nickel	
Body Material and Plating	Plastic	Brass, Nickel
Body Plating Specification		ASTM-B689

Environmental Specifications

Temperature

Operating Range -40 to +85 deg C

Compliance Certifications (see product page for current document)

Plotted and Other Data

Notes:

Click the following link (or enter part number in “SEARCH” on website) to obtain additional part information including price, inventory and certifications: Blue FAKRA Plug to SMA Female Cable Using ET-C100-LSZH Coax In 100 CM Length ET22268

8th Floor, Building 1, Yongfu Science and Technology Center Industrial Park,
Nanzha District 5, Humen,523900, Dongguan, Guangdong, China.

Webstie:www.ebeestock.com Email:sales@ebeestock.com

© 2022 Ebeestock Enterprises All Rights Reserved

Blue FAKRA Plug to SMA Female Cable Using ET38358 Coax In 10 0 CM Length

RF Cable Assemblies Technical Data Sheet ET22268

How to Order

Part Number Configuration: **ET3C5987 - xx uu**

- **uu** — Unit of Measure:
  - cm = Centimeters
  - <blank> = Inches
- **xx** — Length
- **ET3C5987** — Base Number

Example: ET3C5987-12 = 12 inches long cable
ET22268 = 100 cm long cable

Blue FAKRA Plug to SMA Female Cable Using ET-C100-LSZH Coax In 100 CM Length from Ebeestock Enterprises has same day shipment for domestic and International orders. Our RF, microwave and millimeter wave products maintain a 99.4% availability and are part of the broadest selection in the industry.

Click the following link (or enter part number in “SEARCH” on website) to obtain additional part information including price, inventory and certifications: Blue FAKRA Plug to SMA Female Cable Using ET-C100-LSZH Coax In 100 CM Length ET22268

URL: https://www.ebeestock.com/blue-fakra-plug-to-sma-female-cable-using-pe-c100-lszh-coax-in-12-inch-length-0022262

The information contained in this document is accurate to the best of our knowledge and representative of the part described herein. It may be necessary to make modifications to the part and/or the documentation of the part, in order to implement improvements. Ebeestock reserves the right to make such changes as required. Unless otherwise stated, all specifications are nominal. Ebeestock does not make any representation or warranty regarding the suitability of the part described herein for any particular purpose, and Ebeestock does not assume any liability arising out of the use of any part or documentation.

8th Floor, Building 1, Yongfu Science and Technology Center Industrial Park,
Nanzha District 5, Humen,523900, Dongguan, Guangdong, China.

Webstie:www.ebeestock.com Email:sales@ebeestock.com

© 2022 Ebeestock Enterprises All Rights Reserved

© 2022 Ebeestock Enterprises All Rights Reserved

www.ebeestock.com

REVISIONS			
REV.	DESCRIPTION	DATE	APPROVED
A	INITIAL RELEASE	11/8/2021	A. GANWANI

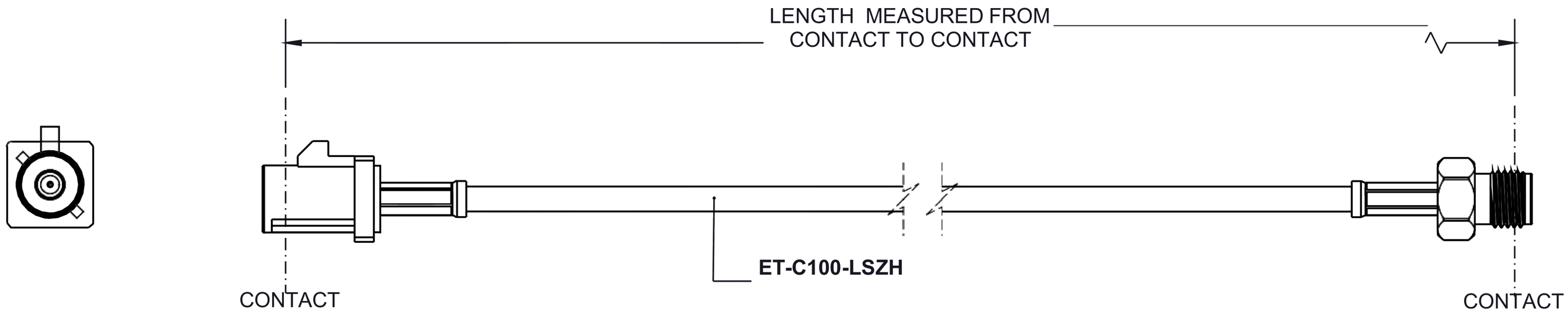

FAKRA PLUG
C CODING
BLUE COLOR

75 Ohm
BNC MALE

THESE COMMODITIES, TECHNOLOGY OR SOFTWARE WERE EXPORTED FROM THE UNITED STATES IN ACCORDANCE WITH THE EXPORT ADMINISTRATION REGULATIONS. DIVERSION CONTRARY TO U.S. LAW PROHIBITED.

UNLESS OTHERWISE SPECIFIED
LEADING DIMENSIONS ARE INCHES
DIMENSIONS IN [ ] ARE MILLIMETERS

TOLERANCES:

.X = ±.2 [5.08]
.XX = ± .02 [.51]
.XXX = ±.005 [.13]

FRACTIONS ± 1/32
ANGLES ± 1°

CABLE LENGTH (L) TOLERANCES:

L ≤ 12 [305] = +1 [25] / -0
12 [305] < L ≤ 60 [1524] = +2 [51] / -0
60 [1524] < L ≤ 120 [3048] = +4 [102] / -0
120 [3048] < L ≤ 300 [7620] = +6 [152] / -0
300 [7620] < L = +5%L / -0

ALL DIMENSIONS SHOWN ARE FOR REFERENCE ONLY.

ebeestock
Ebeestock.com
8th Floor, Building 1, Yongfu Science and Technology Center Industrial Park,
Nanzha District 5, Humen,523900, Dongguan, Guangdong, China.
Webstie: www.ebeestock.com **Email:** sales@ebeestock.com

THIRD-ANGLE PROJECTION

THE INFORMATION AND DESIGN IN THIS DOCUMENT IS THE PROPERTY OF Ebeestock CORPORATION ALL RIGHTS RESERVED.

SHEET 1 OF 1

SCALE N/A

SIZE	CAGE CODE	DRAWN BY	ITEM NO.	REV
A	53919	K.DANG	ET3C5987	A

T-Rev.D